US Army Corps
of Engineers
Mobile District

NOVEMBER 2017

CONSTRUCTION PLANS FOR

CADD CODE: M017EV17

PONCE MARINE UNIT - PIER & BOAT RAMP REPLACEMENT
PONCE, PUERTO RICO

BASKERVILLE-DONOVAN, INC.
Innovative Infrastructure Solutions
1201 MONTLIMAR DRIVE, SUITE 650
MOBILE, ALABAMA 36609 (334) 380-0311
PENSACOLA - PANAMA CITY BEACH - TALLAHASSEE - MOBILE - BREVARD COUNTY - TAMPA

FINAL DESIGN (UNREVIEWED 100%) SUBMITTAL

DRAWINGS IN THIS FOLIO HAVE BEEN REDUCED
TO ONE HALF THE ORIGINAL SCALE

SHEET REF.	TITLE OF DRAWINGS
	COVER
X-001	INDEX OF DRAWINGS
X-002	LOCATION AND VICINITY MAP
X-003	GENERAL NOTES AND SYMBOL LEGEND
X-004	ABBREVIATION LEGEND
C-101	SURVEY CONTROL AND SOIL BORING LOCATION PLAN
C-102	EXISTING CONDITIONS AND REMOVAL PLAN
C-103	PROJECT OVERVIEW
C-104	PIER GEOMETRY AND MOORING CLEAT PLACEMENT PLAN
C-105	BOAT RAMP GEOMETRY PLAN
C-106	BOAT RAMP JOINT LAYOUT AND GRADING PLAN
C-107	ALIGNMENT DATA TABLES AND GEOMETRIC DATA TABLES
C-108	PIER GRADING PLAN
C-300	BOAT RAMP TYPICAL PAVEMENT SECTION
C-301	℄ PROFILE OF BOAT RAMP
C-501	REINFORCED RIGID PAVEMENT JOINT, REINFORCEMENT AND JOINT SEALING DETAILS
C-502	MISCELLANEOUS DETAILS
C-503	UTILITY TRENCH DETAILS
C-504	MISCELLANEOUS DETAILS
C-505	MISCELLANEOUS FENCING DETAILS
H-101	BOAT RAMP WATER OVERVIEW
H-102	PIER WATER OVERVIEW
H-501	MISCELLANEOUS WATER DETAILS
S-001	GENERAL STRUCTURAL NOTES
S-100	FIXED PIER, PILE CAP AND BEAM LAYOUT PLANS
S-101	FIXED PIER AND PILE CAP LAYOUT AND ELEVATION
S-120	FIXED PIER SECTIONS
S-121	STEEL PIPE PILE DETAILS AND SCHEDULES
S-122	FIXED PIER DETAILS
E-001	ELECTRICAL SYMBOL LEGEND & ABBREVIATIONS
E-002	GENERAL ELECTRICAL DESIGNATIONS
E-100	ELECTRICAL SITE LEGEND AND NOTES
E-101	ELECTRICAL SITE PLAN
E-201	FIXED PIER ELECTRICAL PLAN
E-202	LARGE SCALE PLANS
E-501	TYPICAL GROUNDING DETAILS
E-502	TYPICAL ELECTRICAL DETAILS
E-503	TYPICAL BACKBOARD STRUCTURE
E-504	DRY TYPE TRANSFORMER DETAILS AND SCHEDULES
E-601	LUMINAIRE SCHEDULE & NOTES
E-701	TYPICAL PANELBOARD DETAILS AND REQUIREMENTS
E-801	SECURITY SYSTEMS REQUIREMENTS
E-900	SINGLE LINE DIAGRAM NOTES AND SCHEDULES
E-901	SINGLE LINE DIAGRAM

US Army Corps of Engineers

MARK	DESCRIPTION	DATE

ISSUE DATE: NOVEMBER 2017
SOLICITATION NO.:
CONTRACT NO.:
PROJECT NUMBER: M07EV17
FILE NAME: X001EV17.DWG

DESIGNED BY: T. HYMAN
DRAWN BY: J. JOHNSON
CHECKED BY: D. WYATT
SUBMITTED BY: T. HYMAN
SIZE: ANSI D

US ARMY CORPS OF ENGINEERS
MOBILE DISTRICT
MOBILE, ALABAMA

BAKERVILLE-DONOVAN, INC.
INNOVATIVE INFRASTRUCTURE SOLUTIONS
COTS Improvement Program Support Services (COTS)
ENGINEERING SUBMISSION EB-000082
Professional Engineering (Civil) Division - Transportation - Marine - Environmental - Survey

PONCE, PUERTO RICO
PONCE MARINE UNIT - PIER & BOAT RAMP REPLACEMENT

INDEX OF DRAWINGS

SHEET ID
X-001

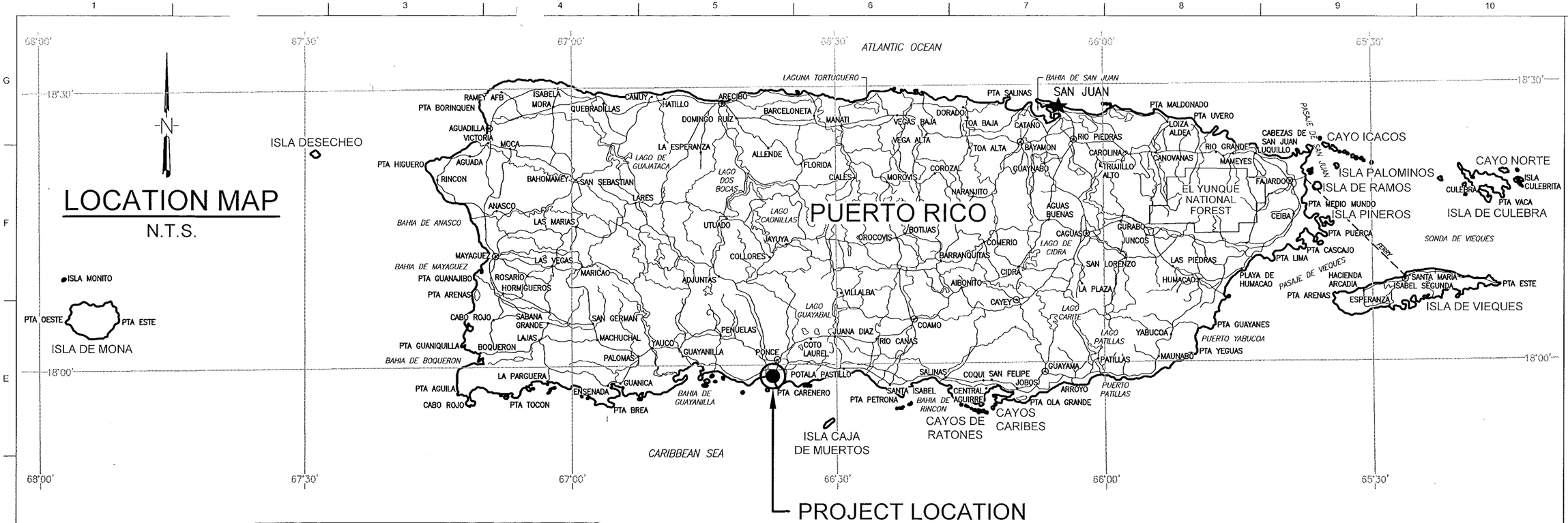

LOCATION MAP

N.T.S.

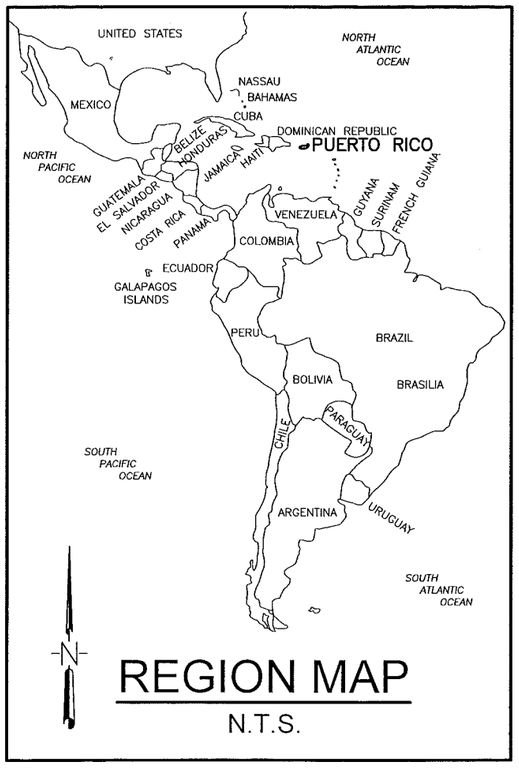

REGION MAP

N.T.S.

PROJECT SITE LOCATION

N.T.S.

US Army Corps of Engineers®

MARK	DESCRIPTION	DATE

ISSUE DATE: NOVEMBER 2017
SOLICITATION NO.: -
CONTRACT NO.: -
PROJECT NUMBER: M017EV17
FILE NAME: M017EV17.DWG

DESIGNED BY: T. HYMAN
DRAWN BY: J. JOHNSON
CHECKED BY: D. WYATT
SUBMITTED BY: T. HYMAN
SIZE: ANSI D

US ARMY CORPS OF ENGINEERS
MOBILE DISTRICT
MOBILE, ALABAMA

BASKERVILLE-DONOVAN, INC.
Innovative Infrastructure Solutions
DUNS: 007900361 CAGE: 1BDM7 NAICS: 541330, 541620, 541690, 541990, 238210, 238290, 238990, 238910, 238320, 238330
Engineering Business EB-0000439
Pensacola • Panama City Beach • Tallahassee • Mobile • Brevard County • Tampa

PONCE, PUERTO RICO
PONCE MARINE UNIT - PIER & BOAT RAMP REPLACEMENT

LOCATION AND VICINITY MAP

SHEET ID

X-002

GENERAL NOTES:

I. ACCESS

A. LOCATION OF CONTRACTOR'S STAGING AREA SHALL BE WITHIN THE PROJECT WORK AREA.

B. ALL HAUL ROADS SHALL BE MAINTAINED SUCH THAT UNOBSTRUCTED ACCESS WILL BE PROVIDED AT ALL TIMES FROM THE ROAD TO THE STAGING AREA AND FROM THE STAGING AREA TO THE WORK SITE AND FACILITATE GOVERNMENT ACCESS TO THE FACILITY AT ALL TIMES. THE MAINTENANCE OF HAUL ROADS SHALL BE THE SOLE RESPONSIBILITY OF THE CONTRACTOR AT NO ADDITIONAL COST TO THE GOVERNMENT.

C. CONTRACTOR SHALL COORDINATE ACTIVITIES THROUGHOUT THE PROJECT IN A MANNER THAT ALLOWS EMERGENCY ACCESS TO ALL EXISTING ROADWAYS AT ALL TIMES WITHOUT DELAYS TO EMERGENCY VEHICLE'S RESPONSE TIME.

D. THE CONTRACTOR SHALL TAKE THE STEPS TO ENSURE THAT PROJECT CONSTRUCTION ACTIVITY DOES NOT INTERFERE WITH REGULAR FACILITY OPERATIONS. REGULAR BRIEFINGS SHALL BE CONDUCTED BY THE CONTRACTOR WITH THE RESPONSIBLE FACILITY OFFICIALS FOR THE PURPOSE OF COORDINATING CONSTRUCTION ACTIVITIES AND SCHEDULED FACILITY OPERATIONS. THE CONTRACTOR SHALL BE RESPONSIBLE FOR COORDINATING THE INTERVAL (WEEKLY, BIWEEKLY, ETC.) FOR THE REQUIRED BRIEFINGS PRIOR TO COMMENCEMENT OF SITE CONSTRUCTION ACTIVITY. THE FACILITY COMMANDER AND/OR THE CONTRACTING OFFICER'S REPRESENTATIVE SHALL HAVE THE AUTHORITY TO IMMEDIATELY SUSPEND AUTHORIZATION TO WORK IN A PARTICULAR AREA OF THE SITE DURING MILITARY EMERGENCIES OR FOR FACILITY SECURITY REASONS.

II. COORDINATION

A. CONTRACTOR SHALL APPOINT A CONSTRUCTION SUPERINTENDENT, SUBJECT TO THE APPROVAL OF THE CONTRACTING OFFICER, WHO SHALL BE PRESENT ON THE CONSTRUCTION SITE AT ALL TIMES DURING WORKING HOURS WHILE JOB IS IN PROGRESS. THE SUPERINTENDENT SHALL BE DESIGNATED THE RESPONSIBLE CONTRACTOR'S REPRESENTATIVE WHO SHALL BE AVAILABLE ON A 24-HOUR BASIS. WHEN THE CONTRACTOR'S REPRESENTATIVE IS NOT AVAILABLE ON THE CONSTRUCTION SITE, AN ALTERNATE REPRESENTATIVE SHALL BE PROVIDED.

B. CONTRACTOR IS RESPONSIBLE FOR OBTAINING ALL PERMITS FOR CONSTRUCTION ACTIVITIES, COORDINATING ALL REQUIREMENTS WITH AUTHORITIES AND FOR SUBMITTING ALL DOCUMENTS FOR PERMITTING AND PERMIT FEES.

III. TRAFFIC CONTROL

A. ALL CONSTRUCTION EQUIPMENT AND VEHICLES SHALL BE MARKED WITH COMPANY INSIGNIAS OR OTHER COMPANY MARKINGS, WHICH ARE CLEARLY VISIBLE.

B. CONSTRUCTION EQUIPMENT SHALL HAVE AUTOMATIC SIGNALING DEVICES TO SOUND AN ALARM WHEN MOVING IN REVERSE.

C. ONLY RUBBER-TIRED VEHICLES SHALL BE ALLOWED ON EXISTING PAVEMENT THAT IS TO REMAIN.

D. NON-CONSTRUCTION PEDESTRIAN TRAFFIC SHALL NOT BE ALLOWED INSIDE THE CONSTRUCTION LIMITS.

E. ANY DAMAGE TO ROADS AND PAVEMENT DUE TO CONSTRUCTION EQUIPMENT OR CONSTRUCTION TRAFFIC SHALL BE REPAIRED TO THEIR ORIGINAL CONDITION BY THE CONTRACTOR AT HIS/HER OWN EXPENSE TO THE SATISFACTION OF THE CONTRACTING OFFICER.

IV. EROSION CONTROL

A. EROSION CONTROL DEVICES SHALL BE USED FOR THE STAGING AREA AND ANY MATERIAL STOCK PILES WHEN NECESSARY TO CONTROL EROSION AND STORM WATER RUNOFF.

B. STOCKPILED MATERIAL SHALL BE CONSTRAINED IN A MANNER TO PREVENT ITS MOVEMENT BY WIND FORCES.

C. LIMITS OF CONSTRUCTION IS DEFINED AS THOSE AREAS AFFECTED BY THE CONTRACTOR'S OPERATIONS INVOLVING EXCAVATION, EMBANKMENT AND FINAL GRADING REQUIRED TO COMPLETE THE WORK IN ACCORDANCE WITH THE ELEVATIONS, GRADES AND SECTIONS SHOWN IN THESE DRAWINGS.

D. EROSION CONTROL MEASURES MUST BE IN PLACE PRIOR TO ANY DISTURBANCE.

E. CONTRACTOR SHALL UTILIZE BEST MANAGEMENT PRACTICES PLAN DETAILS SHOWN HEREIN.

V. CONTRACTOR SAFETY PLAN SUBMITTALS

A. CONTRACTOR SHALL FURNISH A CONSTRUCTION SAFETY PLAN IN ACCORDANCE WITH THE SPECIFICATIONS AND USACE SAFETY MANUAL EM 385-1-1 WITH HIS/HER PROJECT SCHEDULE. THE SAFETY PLAN SHALL IDENTIFY THE FOLLOWING ITEMS:

1. PROPOSED ACCESS POINTS, STAGING AREA AND HAUL ROUTES.
2. TEMPORARY MARKINGS TO BE USED, IF ANY.
3. LOCATION AND TYPE OF BARRICADES OR OTHER TRAFFIC CONTROL DEVICES.
4. METHODS BY WHICH THE CONTRACTOR WILL COMMUNICATE WITH THE CONTRACTING OFFICER.

VI. EXCAVATION AND TRENCHES

A. OPEN TRENCHES AND EXCAVATIONS WITHIN THE CONSTRUCTION SITE SHALL BE PROMINENTLY MARKED WITH ORANGE FENCING OR OTHER MEANS ACCEPTABLE TO THE CONTRACTING OFFICER.

B. PRIOR TO CONSTRUCTION THE CONTRACTOR SHALL LOCATE ALL UTILITIES. ANY UTILITY ADJUSTMENTS, EXISTING OR PROPOSED, REQUIRED TO COMPLETE CONSTRUCTION UNDER THIS CONTRACT SHALL BE THE RESPONSIBILITY OF THE CONTRACTOR. THIS ITEM INCLUDES, BUT IS NOT LIMITED TO; THE TEMPORARY RELOCATION OF EXISTING OVERHEAD POWER LINES. ALL WORK IN THE VICINITY OF OVERHEAD POWER LINES SHALL CONFORM TO APPLICABLE (LOCAL) SAFETY REQUIREMENTS. THE CONTRACTOR IS TO REPAIR DAMAGES TO EXISTING UTILITIES THAT ARE TO REMAIN IN SERVICE IMMEDIATELY AT NO ADDITIONAL COSTS OR EXPENSE TO THE GOVERNMENT.

C. ALL WORK ADJACENT TO OR ON EXISTING ROADWAYS SHALL COMPLY WITH CURRENT LOCAL TRANSPORTATION STANDARDS FOR TRAFFIC CONTROL AND SAFETY. ALL WORK IN AND ADJACENT TO STREETS OR ROADS SHALL BE COORDINATED WITH CONTRACTING OFFICER'S REPRESENTATIVE. THE CONTRACTOR SHALL PROVIDE THE CONTRACTING OFFICERS REPRESENTATIVE WITH A ONE-WEEK ADVANCE NOTICE PRIOR TO BEGINNING OF WORK ADJACENT TO FACILITY ROADWAYS. NO WORK ADJACENT TO OR ON EXISTING ROADS SHALL BE INITIATED WITHOUT PRIOR APPROVAL FROM THE CONTRACTING OFFICER'S REPRESENTATIVE.

VII. SAFETY AND SECURITY REQUIREMENTS

A. CONTRACTOR SHALL MAINTAIN SAFETY PRACTICES THAT CONFORM TO LOCAL REGULATIONS AND USACE SAFETY MANUAL EM385-1-1.

B. OPEN FLAME WELDING OR TORCH CUTTING OPERATIONS SHALL BE PROHIBITED UNLESS ADEQUATE FIRE AND SAFETY PRECAUTIONS ARE PROVIDED AND HAVE BEEN APPROVED BY THE CONTRACTING OFFICERS REPRESENTATIVE.

C. THE CONTRACTOR SHALL BE RESPONSIBLE FOR TEMPORARY FENCING OR OTHER SECURITY MEASURES REQUIRED TO PROTECT WORK OR EQUIPMENT DURING CONSTRUCTION.

SITE SYMBOL LEGEND

DESCRIPTION	EXISTING	NEW
BENCHMARK	OR	OR
SOIL BORING		
CORAL OUTCROPS		
SPOT ELEVATION	XXX.XX	XXX.XX
FLOW ARROW		
REMOVAL		
BUILDING		
WETLAND LIMITS	WTL	
TRAFFIC SIGN		
BOLLARD	BLD	OR BLD
RIGID PAVEMENT AND JOINTS		
FLEXIBLE PAVEMENT		
GRAVEL		
CENTERLINE		
MAJOR CONTOURS	0.00	0.00
MINOR CONTOURS	0.00	0.00
TREE LINE OR WOOD LINE		
FENCE – CHAINLINK	X	X
FENCE – WOOD BOARD	//	//
ROOF DRAIN	DS OR DS	DS OR DS
ROOF DRAIN COLLECTION PIPE	RDC	RDC
STORM DRAINAGE MANHOLE OR BOX	D OR D	D
STORM DRAINAGE PIPE	SD	SD
DRAINAGE SWALE		
RIP-RAP		
MONITORING WELL	W	

SITE SYMBOL LEGEND

DESCRIPTION	EXISTING	NEW
CLEANOUT	CO	CO
GAS LINE	GAS	
JET FUEL LINE	JF	
JET FUEL MANHOLE	J	
UNKNOWN UTILITY LINE	UK	
RUNWAY OR TAXIWAY LIGHT		
AIR CONDITIONER PAD	AC	
UNDERGROUND FIBER OPTIC LINE	UF	
FIBER OPTIC MARKER	FOC	
UNDERGROUND COMMUNICATION LINE	UC	
COMMUNICATION BOX	CB	
COMMUNICATION ANTENNA		
TELEPHONE PEDESTAL	TPD	
UNDERGROUND TELEPHONE LINE	U/T	
TELEPHONE MANHOLE	T	
TELEPHONE POLE	P	
CABLE TV PEDESTAL	CPD	
UNDERGROUND CABLE TV LINE	CATV	
ELECTRICAL METER	M	
ELECTRICAL PULL BOX	EPB	
ELECTRICAL ACCESS PANEL	EAP	
ELECTRICAL TRANSFORMER PAD	ETP	
ELECTRICAL PEDESTAL	EPD	
ELECTRICAL ALARM PANEL OR BOX	AP OR AB	AP OR AB
POWER POLE OR P.P. W/TRANSFORMER	OR OR	
LIGHT POLE	OR OR	
ELECTRICAL MANHOLE	OR E	
OVERHEAD ELECTRICAL LINE	O/E	
UNDERGROUND ELECTRICAL LINE	UE	
GUY WIRE	GUY	
CABLE TV PEDESTAL	CPD	
UNDERGROUND CABLE TV LINE	CATV	
CONDUIT	CD	CD
SANITARY SEWER FORCE MAIN	SSFM	SSFM
SANITARY SEWER LINE	SS	SS
SANITARY SEWER MANHOLE OR BOX	S OR S	S OR S
SANITARY SEWER VENT PIPE	VP	VP
IRRIGATION CONTROL VALVE	ICV	
FIRE FLOW VALVE	FFV	FFV
FIRE FLOW LINE	FF	FF
POST INDICATOR VALVE	PIV	PIV
WATER LINE	W	W
WATER METER	WM OR WM	WM
WATER BACK FLOW PREVENTOR	BFP	BFP
WATER VALVE AND VALVE BOX	OR OR WVB	WV
FIRE HYDRANT	OR	
HOSE BIBB	HB	HB

US Army Corps of Engineers®

MARK	DESCRIPTION	DATE

ISSUE DATE: NOVEMBER 2017
SOLICITATION NO.:
CONTRACT NO.:
PROJECT NUMBER: M017EV17
FILE NAME: X003EV17.DWG

DESIGNED BY: T. HYMAN
DRAWN BY: J. JOHNSON
REVIEWED BY: D. WYATT
SUBMITTED BY: T. HYMAN
SIZE: ANSI D

US ARMY CORPS OF ENGINEERS
MOBILE DISTRICT
MOBILE, ALABAMA

BAKKERVILLE-DONOVAN, INC.
Professional Engineers, Planners, Land Surveyors & Environmental Scientists
Providence - Pawtucket City Square - Tiverton - Hudson - Brewer County - Tampa

PONCE, PUERTO RICO
PONCE MARINE UNIT - PIER & BOAT RAMP REPLACEMENT

GENERAL NOTES AND SYMBOL LEGEND

SHEET ID
X-003

&	AND
∠	ANGLE
@	AT
℄, BL	BASE LINE, BOUNDARY LINE
℄, CL	CENTERLINE
Δ	DELTA
ø, DIA, D	DIAMETER
℄, FL	FLOW LINE
#, NO	NUMBER
±	PLUS OR MINUS
ℙ, PL	PROPERTY LINE, PLATE
AASHO	AMERICAN ASSOCIATION OF STATE HIGHWAY OFFICIALS
AASHTO	AMERICAN ASSOCIATION OF STATE HIGHWAY AND TRANSPORTATION OFFICIALS
AB	ANCHOR BOLT
ABC	ASPHALT BASE COURSE
ABDN	ABANDON
ABS	ACRYLONITRITE–BUTADIENE–STYRENE PIPE
AC, A/C	AIR CONDITIONING UNIT
AC, Ac	ACRE
ACCEL	ACCELERATION
ACCV	AUTOMATIC CONTROL CHECK VALVE
ACI	AMERICAN CONCRETE INSTITUTE
AD	ACCESS DOOR
ADA	THE AMERICANS WITH DISABILITIES ACT
ADD, ADDL	ADDITIONAL
ADJ	ADJUSTABLE
ADPT	ADAPTER
AFF	ABOVE FINISHED FLOOR
AFG	ABOVE FINISHED GRADE
AGG	AGGREGATE
AISC	AMERICAN INSTITUTE OF STEEL CONSTRUCTION
AISI	AMERICAN IRON AND STEEL INSTITUTE
AL	ALABAMA
ALDOT	ALABAMA DEPARTMENT OF TRANSPORTATION
ALK	ALKALINITY
ALUM	ALUMINUM
ALT	ALTERNATE (ING)
AM	12:00 MIDNIGHT UNTIL 11:59 NOON
ANOD	ANODIZE
ANSI	AMERICAN NATIONAL STANDARDS INSTITUTE
AP	ACCESS PANEL
APPROX	APPROXIMATE (LY)
AR	ACID RESISTANT
ARCH	ARCHITECT (URAL) (URE)
ARND	AROUND
ARV	AIR RELEASE VALVE
ASP, ASPH	ASPHALT
ASSEM	ASSEMBLY
ASSOC	ASSOCIATION
ASTM	AMERICAN SOCIETY FOR TESTING MATERIALS
ATTN	ATTENTION
AUTO	AUTOMATIC
AUX	AUXILIARY
AVE	AVENUE
AVG	AVERAGE
AWG	AMERICAN WIRE GAUGE
AWL	AVERAGE WATER LEVEL
AWS	AMERICAN WELDING SOCIETY
BC, B/C	BURIED COMMUNICATION LINE OR DUCT
BCCMP	BITUMINOUS COATED CORRUGATED METAL PIPE CULVERT
BCPA	BITUMINOUS COATED PIPE ARCH CULVERT
BCPCMP	BITUMINOUS COATED AND PAVED CORRUGATED METAL PIPE CULVERT
BCPPA	BITUMINOUS COATED AND PAVED PIPE ARCH CULVERT
BCV	BALL CHECK VALVE
BCWE	BASE CLEARANCE WATER ELEVATION
BE	BURIED ELECTRIC CABLE OR DUCT
BEG	BEGIN
BFP	BACK FLOW PREVENTOR
BFV	BUTTERFLY VALVE
BG	BURIED NATURAL GAS LINE
BIT	BITUMINOUS
BLC	BASE LINE CONTROL
BLDG	BUILDING
BLK, BLKG	BLOCK (ING)
BLVD	BOULEVARD
BM	BENCHMARK, BACKER MATERIAL
BMP	BEST MANAGEMENT PRACTICES
BNDRY	BOUNDARY
BOC	BACK OF CURB
BOF	BOTTOM OF FOOTING
BOW	BOTTOM OF WALL
BPRV	BACK PRESSURE REGULATING VALVE
BRG	BEARING
BTWN, B/W	BETWEEN
BT, B/T	BURIED TELEPHONE CABLE OR DUCT
BTV, B/TV	BURIED TELEVISION CABLE
BV	BALL VALVE
BVL	BEVEL (ED)
BW	BOTH WAYS
BY, BYP	BYPASS
C&G	CURB AND GUTTER
CAP	CAPACITY, CORRUGATED ALUMINIZED PIPE
CASP	CORRUGATED ALUMINIZED STEEL PIPE
CATV	CABLE TELEVISION
CB	CATCH BASIN
CBC	CONCRETE BOX CULVERT
CBR	CALIFORNIA BEARING RATIO
CBS	CONCRETE BOX STRUCTURE
CC, C/C	CENTER TO CENTER
CCEW	CENTER TO CENTER EACH WAY
CCTV	CLOSED CIRCUIT TELEVISION
CCW	COUNTER CLOCKWISE

CD	CROSS DRAIN, CROSS DIRECTION (GEOTEXTILES)
CDT	CONDUIT
CF	CUBIC FOOT
CFM	CUBIC FEET PER MINUTE
CFS	CUBIC FEET PER SECOND
CH	CHANNEL
CHAMF	CHAMFER
CHKD	CHECKED
CHL	CHLORINATOR
CHR	CHLOROPRENE RUBBER (NEOPRENE)
CI	CAST IRON, CURB INLET
CIP	CAST IRON PIPE, CAST IN PLACE
CIR	CIRCLE
CIRC	CIRCUMFERENCE
CIU	CAST IRON PIPE UNLINED
CJ	CONSTRUCTION JOINT
CJP	COMPLETE JOINT PENETRATION WELD
CL2	CHLORINE SYSTEM
CLR	CLEARANCE
CM	CONCRETE MONUMENT, CENTIMETER
CMP	CORRUGATED METAL PIPE
CMAP	CORRUGATED METAL ARCH PIPE
CMU	CONCRETE MASONRY UNITS
CNR	CORNER
CO	CLEAN OUT, COUNTY, COMPANY
COE	CORPS OF ENGINEERS
COL	COLUMN
COR	CONTRACTING OFFICER'S REPRESENTATIVE
COMB	COMBINATION
COMM	COMMUNICATION
COMP	COMPRESSIBLE, COMPOSITE
CONC	CONCRETE
CONN	CONNECT, CONNECTION
CONST	CONSTRUCT, CONSTRUCTION
CONT	CONTINUOUS, CONTINUATION
COORD	COORDINATE
COR	CONTRACTING OFFICER'S REPRESENTATIVE
CORR	CORRUGATED
CP	CONCRETE PIPE
CPE	CORRUGATED POLYETHYLENE PIPE
CPLG	COUPLING
CPT	CONE PENETRATION TEST
CR	CONTROL RADIUS, COUNTY ROAD
CRS	COURSE (S)
CS	CURVE TO SPIRAL
CSP	CORRUGATED STEEL PIPE
CSTG	CASTING
CTG	COATING
CTJ	CONTROL JOINT
CTPB	CEMENT
CTR	CENTER (ED)
CTSK	COUNTERSINK
CU	CUBIC
CUP	COPPER PIPE
CU YD, CY	CUBIC YARD
CULV	CULVERT
CV	CHECK VALVE, VALVE FLOW COEFFICIENT
CW	COLD WATER
CWO	CLEARWELL OVERFLOW
D	DRAIN (STRUCTURE), DEGREE OF CURVATURE, DEPTH, DISTANCE, DIAMETER
DA	DRAINAGE AREA, DEFLECTION ANGLE
DBI	DITCH BOTTOM INLET
DBL	DOUBLE
DCS	DEGREE OF CURVATURE (SPIRAL)
DEG	DEGREE
DEMO	DEMOLITION
DEPT	DEPARTMENT
DET	DETAIL, DETOUR, DETECTION, DETECTABLE
DFE	DESIGN FLOOD ELEVATION
DGN	DRAWING (MICROSTATION)
DHW, DHWE	DESIGN HIGH WATER ELEVATION
DI	DUCTILE IRON, DROP INLET
DIAG	DIAGONAL
DIFF	DIFFUSER
DIM	DIMENSION
DIP	DUCTILE IRON PIPE
DISCH	DISCHARGE
DIST	DISTANCE
DIV	DIVISION
DIW	DEIONIZED WATER
DN	DOWN
DNSTY	DENSITY
DOC	DEGREE OF CURVATURE
DOT	DEPARTMENT OF TRANSPORTATION
DPI	DITCH POINT INTERSECTION
DR	DRAIN, DRIVE, DESIGN REVIEW
DRWY, DWY	DRIVEWAY
DS	DESIGN SPEED
DT	DEPTH, DITCH
DV	DIAPHRAGM VALVE
DWG	DRAWING (AUTOCAD)
DWL	DOWEL
DWTR	DEWATER (ED)
"e"	SUPERELEVATION RATE
E	EAST, EXTERNAL DISTANCE
EA	EACH
ECC	ECCENTRIC
EF	EACH FACE
EFF	EFFLUENT
EL, ELEV	ELEVATION
ELEC	ELECTRIC (AL)
ELLIP	ELLIPTICAL
EMBED	EMBEDMENT
EMBK	EMBANKMENT
EMERG	EMERGENCY
ENGR	ENGINEER
ENT	ENTERING
EP, EOP	EDGE OF PAVEMENT

EQ	EQUAL (LY), EQUATION
EQIV	EQUIVALENT
EQUIP	EQUIPMENT
ES	EACH SIDE
ESMT	EASEMENT
EST	ESTIMATE (D), ESTABLISH (ED)
ETC	ET CETERA (AND SO FORTH)
EVAP	EVAPORATOR (ION)
EW	EACH WAY, ENDWALL
EX	EXCEPT, EXAMPLE
EXC, EXCAV	EXCAVATION
EXIST	EXISTING
EXP	EXPANSION
EXT	EXTERIOR, EXTENSION
EXTD	EXTENDED
EXWY	EXPRESSWAY
EY	EPOXY
FA	FINE AGGREGATE, FEDERAL AID
FAB	FABRICATE (ED)
FAC	FACILITY
FBO	FURNISHED BY OTHERS
FC	FLEX CONNECTION, FRICTION COURSE
FD	FRENCH DRAIN
FDN	FOUNDATION
FDOT	FLORIDA DEPARTMENT OF TRANSPORTATION
FE	FLOOR ELEVATION
FED	FEDERAL
FES	FLARED END SECTION
FETS	FLARED END TERMINAL SECTION
FF, FFL	FIRE FLOW LINE
FFE	FINISHED FLOOR ELEVATION
FH, FHY	FIRE HYDRANT
FHWA	FEDERAL HIGHWAY ADMINISTRATION
FIG	FIGURE
FIN	FINISH (ED)
FL, FLA	FLORIDA
FLD	FLOOR DRAIN
FLEX	FLEXIBLE
FLG	FLANGE (D)
FLR	FLOOR
FM	FORCE MAIN
FOC	FIBER OPTIC CABLE, FACE OF CURB
FPM	FEET PER MINUTE
FPS	FEET PER SECOND
FPT	FEMALE PIPE THREAD
FREQ	FREQUENCY
FRP	FIBERGLASS REINFORCED PLASTIC
FT	FEET, FOOT
FTG	FOOTING, FITTING
FU	FUSE
FURN	FURNISH (ED)
FW	FLUSHING WATER
G	NATURAL GAS, GRAM, GRAVITY
GA	GAUGE, GAGE
GAL	GALLON
GALV	GALVANIZED
GD	GUTTER DRAIN
GEN	GENERATOR
GFI	GROUND FAULT INTERRUPTER
GI	GALVANIZED IRON, GUTTER INLET
GIP	GALVANIZED IRON PIPE
GM	GAS MAIN
GOV	GOVERNMENT, GOVERNMENT OWNED VEHICLE
GP	GRADE POINT
GPD	GALLONS PER DAY
GPM	GALLONS PER MINUTE
GR	GRADE, GUARD RAIL, GRATE
GRAV	GRAVITY
GRC	GALVANIZED RIGID STEEL CONDUIT
GRD, GRND	GROUND
GRI	GEOSYNTHETIC RESEARCH INSTITUTE
GRP	GRIT REMOVAL PUMP
GRTG	GRATING
GRU	GRIT REMOVAL UNIT
GSKT	GASKET
GSP	GALVANIZED STEEL PIPE
GTTR	GUTTER
GV	GATE VALVE, NATURAL GAS VALVE
"ha"	HECTARE
HB	HAY BALES, HOSE BIBB
HC	HORIZONTAL CLEARANCE
HD	HIGH DENSITY, HEAVY DUTY, HEAD
HDPE	HIGH DENSITY POLYETHYLENE
HDR	HEADER
HDWKS	HEADWORKS
HDWL	HEADWALL
HDWR	HARDWARE
HEX	HEXAGON
HGR	HANGER
HH	HANDHOLE
HK	HOOK
HMA	HOT MIX ASPHALT
HNDRL	HANDRAIL
HORZ	HORIZONTAL
HOV	HIGH OCCUPANCY VEHICLE
HP	HIGH POINT, HORSEPOWER, HIGH PRESSURE
HPA	HIGH PRESSURE AIR
HR	HOUR
HT	HEIGHT
HTHW	HIGH TEMPERATURE HOT WATER
HVAC	HEATING, VENTILATING AND AIR CONDITIONING
HW	HOT WATER, HIGH WATER
HWA	HIGH WATER ALARM
HWL	HIGH WATER LEVEL
HWY	HIGHWAY
I	EXTERNAL ANGLE (DELTA), INTERSTATE
ICV	IRRIGATION CONTROL VALVE
ID	INSIDE DIAMETER, IDENTIFICATION
IF	INSIDE FACE
IMC	INTERMEDIATE METAL CONDUIT
IN	INCH (ES)

INC	INCORPORATED, INCLUDING
IND	INDUSTRY, INDUSTRIAL
INF	INFLUENT
INS	INSIDE
INSTR	INSTRUMENT
INSUL	INSULATION
INT	INTERIOR
INTER	INTERMEDIATE
INV	INVERT
IP	IRON PIPE
IR	IRON ROD
IRC	IRON ROD AND CAP
IRR	IRRIGATION
ISECT	INTERSECTION
ISL	ISLAND
ISOL	ISOLATION
ITE	INSTITUTE OF TRANSPORTATION ENGINEERS
JB	JUNCTION BOX
JCT	JUNCTION
JT	JOINT
K	KILO, KELVIN, DESIGN HOUR FACTOR
KG	KILOGRAM
KG/m	KILOGRAM PER METER
KG/m²	KILOGRAM PER SQUARE METER
KG/m³	KILOGRAM PER CUBIC METER
KILO	ONE THOUSAND
KIP	1000 POUNDS
KM	KILOMETER
KM/H	KILOMETER PER HOUR
KO	KNOCKOUT
kPa	KILOPASCAL
KSI	KIPS (1000 POUNDS) PER SQUARE INCH
L	LENGTH, LENGTH OF CURVE, LITER, LEFT, TAPER LENGTH, BUFFER LENGTH, TAPER LENGTH PLUS BUFFER SPACE
LAB	LABORATORY
LAM	LAMINATED
LAT	LATERAL, LATITUDE
LAV	LAVATORY
LB	POUND
LB/SY	POUNDS PER SQUARE YARD
LBS	POUNDS
LBR	LIME ROCK BEARING RATIO
LC	LONG CHORD
LCD	LONGITUDINAL CHANNELIZING DEVICE
LF	LINEAR FOOT (FEET)
LFD	LOAD FACTOR DESIGN
LG	LONG
LGB	LAG BOLT
LGTH	LENGTH
LIN	LINEAR
LL	LIVE LOAD
LMRK	LIME ROCK
LNDG	LANDING
LOC	LOCATION, LOCATED
LONG	LONGITUDE (INAL)
LOS	LIMIT OF CLEAR SIGHT
LP	LOW POINT, LOW PRESSURE, LIGHT POLE
LR	LONG RADIUS
LS	LUMP SUM, LENGTH OF SPIRAL
LT	LEFT, LIGHT, LEFT TURN
LTD	LIGHTED, LIMITED
LUM	LUMINAIRE
LVG	LEAVING
LW, L/W	LIGHTWEIGHT
LWA	LOW WATER ALARM
LWL	LOW WATER LEVEL
m	METER, MASS, MIDDLE ORDINATE LENGTH, MEGA, MILLI
m²	METER SQUARE
m/S	METERS PER SECOND
m³	METER CUBED, CUBIC METER
m³/m	METER CUBED PER METER
MAINT	MAINTENANCE
MASY	MASONRY
MATL	MATERIAL
MAX	MAXIMUM
MCJ	MASONRY CONTROL JOINT
MECH	MECHANICAL
MEGA	ONE MILLION
MES	MITERED END SECTION
MFD	MANUFACTURED
MFG	MANUFACTURING
MG	1000 GALLONS
MG/L	MILLIGRAMS PER LITER
MGD	MILLION GALLONS PER DAY
MH	MANHOLE, MOUNTING HEIGHT
MHW	MEAN HIGH WATER
MHU	MUNITIONS HAULING UNIT
MI	MILE
MID	MIDDLE
MIL	MILITARY
MILLI	ONE THOUSANDTH OF AN METER
MIN	MINIMUM, MINUTE
MISC	MISCELLANEOUS
ML	MILLILITER
MLW	MEAN LOW WATER
mm	MILLIMETER
MOBL	MOBILIZATION
MOD	MODIFY, MODIFIED
MON	MONUMENT
MPa	MEGAPASCAL
MPH	MILES PER HOUR
MRPP	METAL REINFORCED PLASTIC PIPE
MSL	MEAN SEA LEVEL
MTD	MOUNTED
MTG	MOUNTING
MTL	METAL
MUTCD	MANUAL ON TRAFFIC CONTROL DEVICES
MW	MONITORING WELL
N	NORTH, NEUTRAL, NEWTON
N&C	NAIL AND CAP

N&D	NAIL AND DISK
N&T, NT	NAIL AND TIN, NON TRAFFIC
NA, N/A	NOT AVAILABLE, NOT APPLICABLE
NAVD	NATIONAL AMERICAN VERTICAL DATUM
NB	NORTHBOUND
NC	NORMAL CROWN, NATIONAL COARSE
NE	NORTHEAST
NG, NGL	NATURAL GAS LINE
NGS	NATIONAL GEODETIC SURVEY
NGVD	NATIONAL GEODETIC VERTICAL DATUM OF 1929
NHS	NATIONAL HIGHWAY SYSTEM
NHW	NORMAL HIGH WATER
NIC	NOT IN CONTRACT
NOAA	NATIONAL OCEANIC AND ATMOSPHERIC ADMINISTRATION
NOM	NOMINAL
NORM	NORMAL
NOS	NATIONAL OCEANOGRAPHIC SURVEY
NP	NON PLASTIC
NPS	NOMINAL PIPE SIZE
NPT	NATIONAL PIPE THREAD
NPW	(NON–POTABLE) RAW WATER
NRCP	NON REINFORCED CONCRETE PIPE
NTS	NOT TO SCALE
NW	NORTHWEST
OA	OVERALL
OC	ON CENTER
OD	OUTSIDE DIAMETER
OE, O/E	OVERHEAD ELECTRIC
OF	OUTSIDE FACE, OVERFLOW
OH, OHD	OVERHEAD
OO	OUT TO OUT
OPASS	OVERPASS
OPNG	OPENING
OPP	OPPOSITE
OPT	OPTION (AL) (ALLY)
OSHA	OCCUPATIONAL SAFETY AND HEALTH ADMINISTRATION
OT, O/T	OVERHEAD TELEPHONE
OTV, O/TV	OVERHEAD CABLE TELEVISION
OVF	OVERFLOW
OZ	OUNCE
Pa	PASCAL
PAR	PARALLEL
PAVT	PAVEMENT
PBAV	PLASTIC BALL VALVE
PC	POINT OF CURVATURE
PCBC	PRECAST CONCRETE BOX CULVERT
PCC	POINT OF COMPOUND CURVATURE, PLAIN CEMENT CONCRETE
PCCP	PRESTRESSED CONCRETE CYLINDER PIPE
PCE	PERMANENT CONSTRUCTION EASEMENT
PCF	POUNDS PER CUBIC FOOT
PCV	PRESSURE CONTROL VALVE
PE	PROFESSIONAL ENGINEER, PLAIN END
PED	PEDESTRIAN, PEDESTAL
PEN	PENETRATION
PERF	PERFORATED
PG	PROFILE GRADE
PGL	PROFILE GRADE LINE
PH	PHASE
PI	POINT OF INTERSECTION
PINF	PRIMARY INFLUENT
PIV	POINT INDICATOR VALVE
PJF	PREMOLDED JOINT FILLER
PKG	PACKAGE, PARKING
PKWY	PARKWAY
PLS	PLASTIC LINED STEEL, PROFESSIONAL LAND SURVEYOR
PLYWD	PLYWOOD
PM	12:00 NOON UNTIL 11:59 MIDNIGHT, PROJECT MANAGER
PNL	PANEL
POC	POINT ON CURVE
POJ	PUSH ON JOINT
POL	POLYMER
POST	POINT ON SEMI TANGENT
POT	POINT OF TANGENT
PP	POWER POLE
PPM	PARTS PER MILLION
PPP	POLYPROPYLENE PIPE
PRC	POINT OF REVERSE CURVATURE
PRCST	PRECAST
PREFAB	PRE--FABRICATED
PRES	PRESSURE
PREST	PRESTRESSED
PRIM	PRIMARY
PRM	PERMANENT REFERENCE MONUMENT
PROB	PROBABILITY
PROD	PRODUCT, PRODUCTION, PRODUCED
PROG	PROGRAM, PROGRESSION
PROJ	PROJECT, PROJECTION
PROP	PROPOSED
PROV	PROVISIONS
PRV	PRESSURE RELIEF VALVE
PS	PUMP STATION
PSF	POUNDS PER SQUARE FOOT
PSI	POUNDS PER SQUARE INCH
PSU	PRESTRESSED SLAB UNIT
PT	POINT OF TANGENCY, PRESSURE TREATED
PV	PLUG VALVE
PVC	POLYVINYL CHLORIDE
PVMT	PAVEMENT
PVRV	PRESSURE VACUUM RELIEF VALVE
PW	POTABLE WATER, PRESSURIZED WATER
PWH	PROTECTED HOT WATER
PWL	PEAK WATER LEVEL
PWM	POTABLE WATER METER
Q	PEAK DISCHARGE, FLOW VOLUME
QPL	QUALIFIED PRODUCTS LIST
QTY	QUANTITY, QUALITY
R, RAD	RADIUS, RADIAN

R, RT	RIGHT
RC	REINFORCED CONCRETE, REVERSE CROWN
RCCP	REINFORCED CONCRETE CYLINDER PIPE
RCP	REINFORCED CONCRETE PIPE
RCPA, RCAP	REINFORCED CONCRETE ARCH PIPE
RCWM	RECLAIMED WATER MAIN
RD	ROOF DRAIN, ROUND, ROAD
RDC	ROOF DRAIN COLLECTION PIPE
RDSD	ROADSIDE
RDWY	ROADWAY
RED	REDUCER
REF	REFERENCE, REFER
REFL	REFLECTIVE
REG	REGISTERED, REGULATOR, REGION, REGULAR
REINF	REINFORCING, REINFORCED
RELOC	RELOCATED
REM	REMOVE, REMOVAL
REPL	REPLACE
REQ, REQ'D	REQUIRED
RES	RESIDUAL, RESIDENCE, RESIDENTIAL
REV	REVISE, REVISED, REVISION
RGS	RIGID GALVANIZED STEEL
RHW	INSULATION (MOISTURE & HEAT RESISTANT RUBBER)
RJ	RESTRAINED JOINT
RL	RAIN LEADER
RM	ROOM, REFERENCE MONUMENT
RND	ROUND
RNG	RANGE
R/S	REVOLUTION PER SECOND
RO	ROUGH OPENING
ROW, R/W	RIGHT OF WAY
RP	REFERENCE POINT
RPBP	REDUCED PRESSURE BACKFLOW PREVENTOR
RPM	REVOLUTIONS PER MINUTE, RAISED REFLECTIVE PAVEMENT MARKERS
RR	RAILROAD
RS	RAW SEWAGE
RSF	RESURFACE
RU	REUSE, RACK UNIT
RW	RAW WATER
SAN	SANITARY SEWER
SB	SOUTHBOUND, STRUCTURE BOTTOM
SC	SEAL COAT, SPIRAL TO CURVE
SCH	SCHEDULE
SCV	SILENT CHECK VALVE
SD	STORM DRAIN, SIDE DRAIN
SE	SOUTHEAST
SEC	SECOND, SECONDARY
SECT	SECTION
SED	SEDIMENT
SEP	SEPARATOR
SEQ	SEQUENTIAL
SERV	SERVICE
SF	SQUARE FOOT, SILT FENCE
SG	SLUICE GATE, SPECIFIC GRAVITY
SHT	SHEET
SHLDR	SHOULDER
SHW	SEASONAL HIGH WATER
SIP	STAY IN PLACE
SJ	SOLDERED JOINT
SL	SLUDGE
SLG	SLIDE GATE
SLV	SLEEVE
SOJ	SLIP ON JOINT
SP	SUPERPAVE, STATIC PRESSURE
SPC	SPACE (S) (ED) (ING)
SPEC	SPECIFICATION, SPECIFIED
SPG	SPRING
SPR	SPRINKLER LINE
SPT	STANDARD PENETRATION TEST
SPW	SPRAY WATER
SQ	SQUARE
SQ FT	SQUARE FOOT
SQ IN	SQUARE INCH
SQ YD, SY	SQUARE YARD
SR	STATE ROAD
SRAP	SPIRAL RIB ALUMINUM PIPE
SRASP	SPIRAL RIB ALUMINIZED STEEL PIPE
SRCP	STEEL REINFORCED CONCRETE PIPE
SRSP	SPIRAL RIB STEEL PIPE
SS	STAINLESS STEEL, SANITARY SEWER
SSL	SANITARY SEWER LATERAL
SSLS	SANITARY SEWER LIFT STATION
SSP	STAINLESS STEEL PIPE
ST	SURFACE TREATMENT, SPIRAL TO TANGENT, STREET
STA	STATION
STAB	STABILITY, STABILIZATION
STD	STANDARD
STG	STRONG
STGE	STORAGE
STIFF	STIFFENER
STIR	STIRRUP (S)
STL	STEEL
STR, STRUC	STRUCTURE (S) (URAL)
SU	SINGLE UNIT TRUCKS
SUB	SUBTRACT, SUBSTITUTE, SUBSOIL
SUPPTS	SUPPORTS
SUR	SURVEY
SUSP	SUSPENDED
SW	SOUTHWEST, SWITCH, SIDEWALK
SWBD	SWITCHBOARD
SWD	SIDE WATER DEPTH
SWK	SIDEWALK
SWPPP	STORMWATER POLLUTION PREVENTION PLAN
SYM	SYMMETRICAL
SYS, SYST	SYSTEM
T	TANGENT, LENGTH OF CURVE, TOWNSHIP, METRIC TON
T&B	TOP AND BOTTOM

T&G	TONGUE AND GROOVE
TAN	TANGENT
TBM	TEMPORARY BENCHMARK
TC	TANGENT TO CURVE
TCE	TEMPORARY CONSTRUCTION EASEMENT
TCP	TERRA COTTA PIPE, TRAFFIC CONTROL PLAN(S)
TD	TRENCH DRAIN
TECH	TECHNICAL
TEL	TELEPHONE
TEMP	TEMPERATURE, TEMPORARY
THD	THREADED
THK	THICK (NESS)
THRMPLSTC	THERMOPLASTIC
THW, THWN	INSULATION (FLAME RETARDANT, MOISTURE AND HEAT RESISTANT THERMOPLASTIC)
TKD	TANK DRAIN
TN	TON
TOB	TOP OF BANK/BERM
TOC	TOP OF CURB/CONCRETE
TOS	TOE OF SLOPE
TOW	TOP OF WALL
TP	TURNING POINT
TR	TRIANGULATION POINT
TRAF	TRAFFIC
TRAN	TRANSFER
TRANS	TRANSVERSE, TRANSITION, TRANSLATE, TRANSFORMER
TREAT	TREATMENT
TS	TANGENT TO SPIRAL, STRUCTURAL TUBING (STEEL UNLESS NOTED)
TSC	LENGTH OF TANGENT (SPIRAL CURVE)
TTC	TEMPORARY TRAFFIC CONTROL
TURB	TURBIDITY
TV	TELEVISION
TWP	TOWNSHIP
TYP	TYPICAL
UC	UNDERGROUND COMMUNICATIONS LINE
UD	UNDERDRAIN
UE	UNDERGROUND ELECTRICAL LINE
UG	UNDERGROUND, UNDERGROUND NATURAL GAS
UGTC	UNDERGROUND TELEPHONE CABLE
ULT	ULTIMATE
ULTD	UNLIMITED
UNO	UNLESS NOTED OTHERWISE
UNTR	UNTREATED
UON	UNLESS OTHERWISE NOTED
USACE	US ARMY CORPS OF ENGINEERS
USC&GS	US COAST AND GEODETIC SURVEY (NOW NATIONAL GEODETIC SURVEY)
USGS	US GEOLOGICAL SURVEY
USPS	UNITED STATES POSTAL SERVICE
UTIL	UTILITIES
UV	ULTRAVIOLET
V	VOLUME, VOLTS, VELOCITY
VAC	VACUUM
VAR	VARIOUS, VARIABLE
VB	VALVE BOX
VC	VERTICAL CURVE
VCP	VITRIFIED CLAY PIPE
VEH	VEHICLE
VEL	VELOCITY
VERT	VERTICAL
VF	VERTICAL FOOT
VIB	VIBRATION
VOL	VOLUME
VP	VERTICAL PANEL, VENT PIPE
VPD	VEHICLES PER DAY
VPH	VEHICLES PER HOUR
VPHPL	VEHICLES PER HOUR PER LANE
VS	VARIABLE SPEED
VT	VENT
VTR	VENT THRU ROOF
VVE	VERIFIED VERTICAL ELEVATION
VVEHL	VERIFIED VERTICAL ELEVATION AND HORIZONTAL LOCATION
VW	VARIABLE WIDTH
W	WATER LINE, WIDTH, WEST
W/	WITH
W/C	WATER CEMENT RATIO
W/O	WITHOUT
WAP	WALL PIPE
WB	WESTBOUND
WBW	WASTE BACKWASH WATER
WC	WATER CLOSET
WF	WIDE FLANGE (STEEL), WATER FAUCET
WH	WATER HEATER
WJ	WELDED JOINT
WL	WATER LEVEL
WM	WATER MAIN, WATER METER
WP	WELDED PIPE, WORKING POINT
WPF	WEATHERPROOF
WR	WASHWATER RECOVERY
WS	WATER STOP, WATER SURFACE
WSD	WASHWATER DRAIN
WSH	WASHWATER
WSV	WALL SLEEVE
WT	WEIGHT, WATER TABLE, STEEL TEE–SHAPE DESIGNATION
WTP	WATER TREATMENT PLANT
WW	WASTE WATER
WWF	WELDED WIRE FABRIC
WWR	WELDED WIRE REINFORCING
WWTP	WASTEWATER TREATMENT PLANT
X	COORDINATE VALUE (EAST–WEST DIRECTION)
X RD	CROSS ROAD
XING	CROSSING
XSEC	CROSS SECTION
Y	COORDINATE VALUE (NORTH–SOUTH DIRECTION)
YD	YARD
YR	YEAR

US Army Corps of Engineers®

MARK	DESCRIPTION	DATE

ISSUE DATE: NOVEMBER 2017
SOLICITATION NO.:
CONTRACT NO.:
PROJECT NUMBER: M017EV17
FILE NAME: X004EV17.DWG

DESIGNED BY: T. HYMAN
DRAWN BY: J. JOHNSON
REVIEWED BY: D. WYATT
SUBMITTED BY: T. HYMAN
SIZE: ANSI D

US ARMY CORPS OF ENGINEERS
MOBILE DISTRICT
MOBILE, ALABAMA

BAKERSVILLE–DONOVAN, INC.
Innovative Infrastructure Solutions
1031 Ziegler Drive, Suite 300, Ridgeland, MS 39157 (601) 605-0047
Richmond Georgia Business ID: 6000040
Pensacola - Panama City Beach - Tallahassee - Mobile - Brevard County - Tampa

PONCE, PUERTO RICO
PONCE MARINE UNIT - PIER & BOAT RAMP REPLACEMENT

ABBREVIATION LEGEND

SHEET ID
X-004

NOTES:

1. ALL DIMENSIONS ARE IN METERS (m), OTHERWISE AS INDICATED.
2. TOPOGRAPHIC SURVEY WAS PERFORMED IN MAY 2016 BY SURVEY ENGINEER RENAN LOPEZ DE AZUA, JAVIER O. ESCOBALES RLDA SURVEYING & MAPPING, SAN JUAN, PUERTO RICO.
3. THE COMPLETE SURVEY REPORT CAN BE OBTAINED FROM THE CONTRACTING OFFICER'S REPRESENTATIVE. REPORT IS 24 PAGE DOCUMENTATION FOR THE DATUM AND GPS POINTS USED FOR THE SURVEY PROVIDED FOR THE DESIGN OF THIS PROJECT.
4. EXISTING CONDITIONS SHOWN IS BASED ON A COMBINATION OF SURVEY, 2004 ASBUILT DRAWINGS FROM THE U.S. CUSTOMS BOATHOUSE PROJECT, AND SUPERPOSED AERIAL IMAGERY.
4. SEE SHEET X-003 FOR SYMBOL LEGEND AND SHEET X-004 FOR ABBREVIATION LEGEND.
5. THE INITIAL GEOTECHNICAL INVESTIGATION WAS COMMISSIONED BY USACE JACKSONVILLE AND PREFORMED ON 22 AUGUST 2016 FOR US CUSTOMS DOCK AND WAVE ATTENUATOR PROJECT AT PONCE, PUERTO RICO. IN ORDER TO OBTAIN MORE DETAILED GEOTECHNICAL DATA FOR PILING, AN ADDITIONAL GEOTECHNICAL INVESTIGATION WAS COMMISSIONED AND PREFORMED BY MGV GEOTECHNICAL GROUP, PSC ON 17 JULY 2017 FOR PROPOSED US COAST GUARD DOCK AT PONCE, PUERTO RICO.
6. ALL CONTOURS AND ELEVATIONS IN WATER ARE NEGATIVE RELATIVE TO MEAN SEA LEVEL (MSL).
7. PIER ALIGNMENT AND PILE PLACEMENT AS INDICATED TO AVOID CORAL OUTCROPS.

SOIL BORING DATA TABLE

DESIGNATION	NORTHING	EASTING
B-1	216072.313	180189.469
B-2	216128.563	180202.472
CB-PBR16-01	216120.090	180242.015
CB-PBR16-02	216113.074	180240.790
CB-PBR16-03	216105.153	180225.858
CB-PBR16-04	216098.448	180234.388

BENCHMARK DATA TABLE

DESIGNATION	NORTHING	EASTING	ELEVATION	DESCRIPTION
16093-1	216184.294	180224.564	1.146	EXISTING BENCHMARK
C1012	217058.875	180932.021	7.215	EXISTING BENCHMARK
PH-1 USE	215010.181	180102.222	1.694	EXISTING BENCHMARK
PH-2	215170.369	180386.454	1.741	EXISTING BENCHMARK

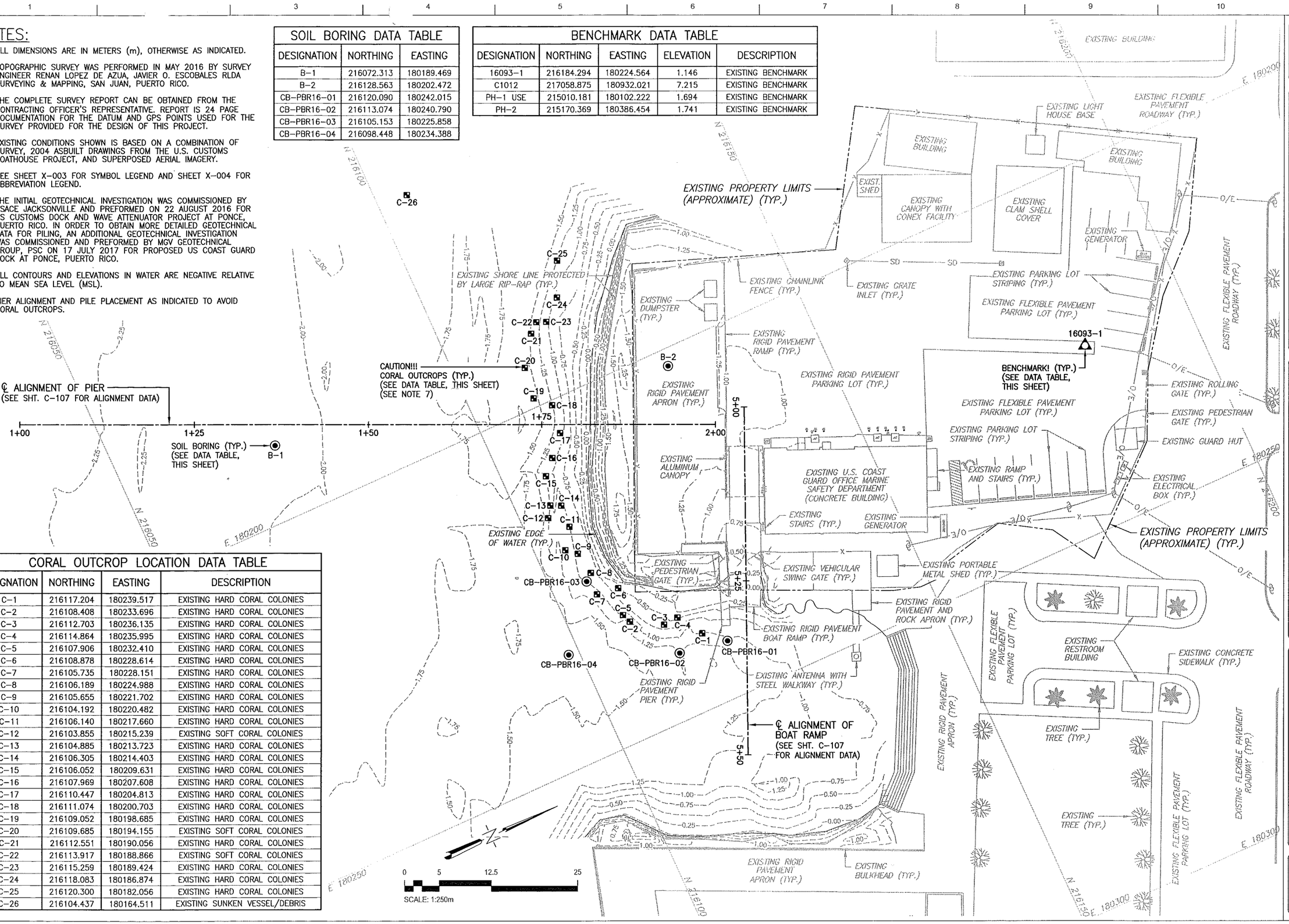

CORAL OUTCROP LOCATION DATA TABLE

DESIGNATION	NORTHING	EASTING	DESCRIPTION
C-1	216117.204	180239.517	EXISTING HARD CORAL COLONIES
C-2	216108.408	180233.696	EXISTING HARD CORAL COLONIES
C-3	216112.703	180236.135	EXISTING HARD CORAL COLONIES
C-4	216114.864	180235.995	EXISTING HARD CORAL COLONIES
C-5	216107.906	180232.410	EXISTING HARD CORAL COLONIES
C-6	216108.878	180228.614	EXISTING HARD CORAL COLONIES
C-7	216105.735	180228.151	EXISTING HARD CORAL COLONIES
C-8	216106.189	180224.988	EXISTING HARD CORAL COLONIES
C-9	216105.655	180221.702	EXISTING HARD CORAL COLONIES
C-10	216104.192	180220.482	EXISTING HARD CORAL COLONIES
C-11	216106.140	180217.660	EXISTING HARD CORAL COLONIES
C-12	216103.855	180215.239	EXISTING SOFT CORAL COLONIES
C-13	216104.885	180213.723	EXISTING HARD CORAL COLONIES
C-14	216106.305	180214.403	EXISTING HARD CORAL COLONIES
C-15	216106.052	180209.631	EXISTING HARD CORAL COLONIES
C-16	216107.969	180207.608	EXISTING HARD CORAL COLONIES
C-17	216110.447	180204.813	EXISTING HARD CORAL COLONIES
C-18	216111.074	180200.703	EXISTING HARD CORAL COLONIES
C-19	216109.052	180198.685	EXISTING HARD CORAL COLONIES
C-20	216109.685	180194.155	EXISTING SOFT CORAL COLONIES
C-21	216112.551	180190.056	EXISTING HARD CORAL COLONIES
C-22	216113.917	180188.866	EXISTING SOFT CORAL COLONIES
C-23	216115.259	180189.424	EXISTING HARD CORAL COLONIES
C-24	216118.083	180186.874	EXISTING HARD CORAL COLONIES
C-25	216120.300	180182.056	EXISTING HARD CORAL COLONIES
C-26	216104.437	180164.511	EXISTING SUNKEN VESSEL/DEBRIS

US Army Corps of Engineers®

MARK	DESCRIPTION	DATE

ISSUE DATE: NOVEMBER 2017
SOLICITATION NO.: -
CONTRACT NO.: -
PROJECT NUMBER: M017EV17
DESIGNED BY: T. HYMAN
DRAWN BY: J. JOHNSON
CHECKED BY: -
SUBMITTED BY: T. HYMAN
SIZE: ANSI D
FILE NAME: C101EV17.DWG

US ARMY CORPS OF ENGINEERS
MOBILE DISTRICT
MOBILE, ALABAMA

BASKERVILLE-DONOVAN, INC.
Innovative Infrastructure Solutions
1200 MONTGOMERY HIGHWAY, BIRMINGHAM, AL 35216 (205) 823-7233
ENGINEERING BUSINESS ID:C-00242
Pensacola • Panama City Beach • Tallahassee • Mobile • Brevard County • Tampa

PONCE, PUERTO RICO
PONCE MARINE UNIT - PIER & BOAT RAMP REPLACEMENT

SURVEY CONTROL AND SOIL BORING LOCATION PLAN

SHEET ID
C-101

REMOVAL NOTES:

1. SEE SHEET C-101 FOR SURVEY CONTROL POINTS, BENCHMARKS, AND COORDINATES.
2. SEE SHEET X-003 FOR SYMBOL LEGEND AND SHEET X-004 FOR ABBREVIATION LEGEND.
3. ALL EXISTING DEBRIS AND DEBRIS FROM CONSTRUCTION OPERATIONS SHALL BE DISPOSED OF OFF-SITE AT THE CONTRACTOR'S EXPENSE.
4. ALL RIP-RAP TEMPORARILY REMOVED SHALL BE STOCKPILED ON-SITE IN AN APPROVED LOCATION AND REDISTRIBUTED AS REQUIRED.
5. ALL WORK ADJACENT TO OR ON EXISTING ROADWAYS SHALL COMPLY WITH CURRENT LOCAL TRANSPORTATION STANDARDS FOR TRAFFIC CONTROL AND SAFETY. ALL WORK IN AND ADJACENT TO STREETS OR ROADS SHALL BE COORDINATED WITH CONTRACTING OFFICER'S REPRESENTATIVE. THE CONTRACTOR SHALL PROVIDE THE CONTRACTING OFFICERS REPRESENTATIVE WITH A ONE-WEEK ADVANCE NOTICE PRIOR TO BEGINNING OF WORK ADJACENT TO ROADWAYS. NO WORK ADJACENT TO OR ON EXISTING ROADS SHALL BE INITIATED WITHOUT PRIOR APPROVAL FROM THE CONTRACTING OFFICER'S REPRESENTATIVE.
6. PRIOR TO CONSTRUCTION THE CONTRACTOR SHALL LOCATE ALL UTILITIES. ANY UTILITY ADJUSTMENTS, EXISTING OR PROPOSED, REQUIRED TO COMPLETE CONSTRUCTION UNDER THIS CONTRACT SHALL BE THE RESPONSIBILITY OF THE CONTRACTOR. THIS ITEM INCLUDES, BUT IS NOT LIMITED TO; THE TEMPORARY RELOCATION OF EXISTING OVERHEAD POWER LINES. ALL WORK IN THE VICINITY OF OVERHEAD POWER LINES SHALL CONFORM TO APPLICABLE (LOCAL) SAFETY REQUIREMENTS. THE CONTRACTOR IS TO REPAIR DAMAGES TO EXISTING UTILITIES THAT ARE TO REMAIN IN SERVICE IMMEDIATELY AT NO ADDITIONAL COSTS OR EXPENSE TO THE GOVERNMENT.
7. THE FINAL LAYOUT AND EXTENT OF THE TEMPORARY COFFERDAM WILL BE A FUNCTION OF THE EQUIPMENT OPERATING AREAS AND THE METHOD OF COFFERDAM LATERAL BRACING. THE CONTRACTOR SHALL PROVIDE AN ENGINEERED COFFERDAM INSTALLATION SUFFICIENT TO CONSTRUCT THE PROPOSED BOAT RAMP WITH RIGID PAVEMENT CONSTRUCTION.
8. REMOVE EXISTING RIGID PAVEMENT BOAT RAMP, RIGID PAVEMENT PIER, EXISTING RIP-RAP AND MISCELLANEOUS DEBRIS AS REQ'D. FOR NEW CONSTRUCTION.

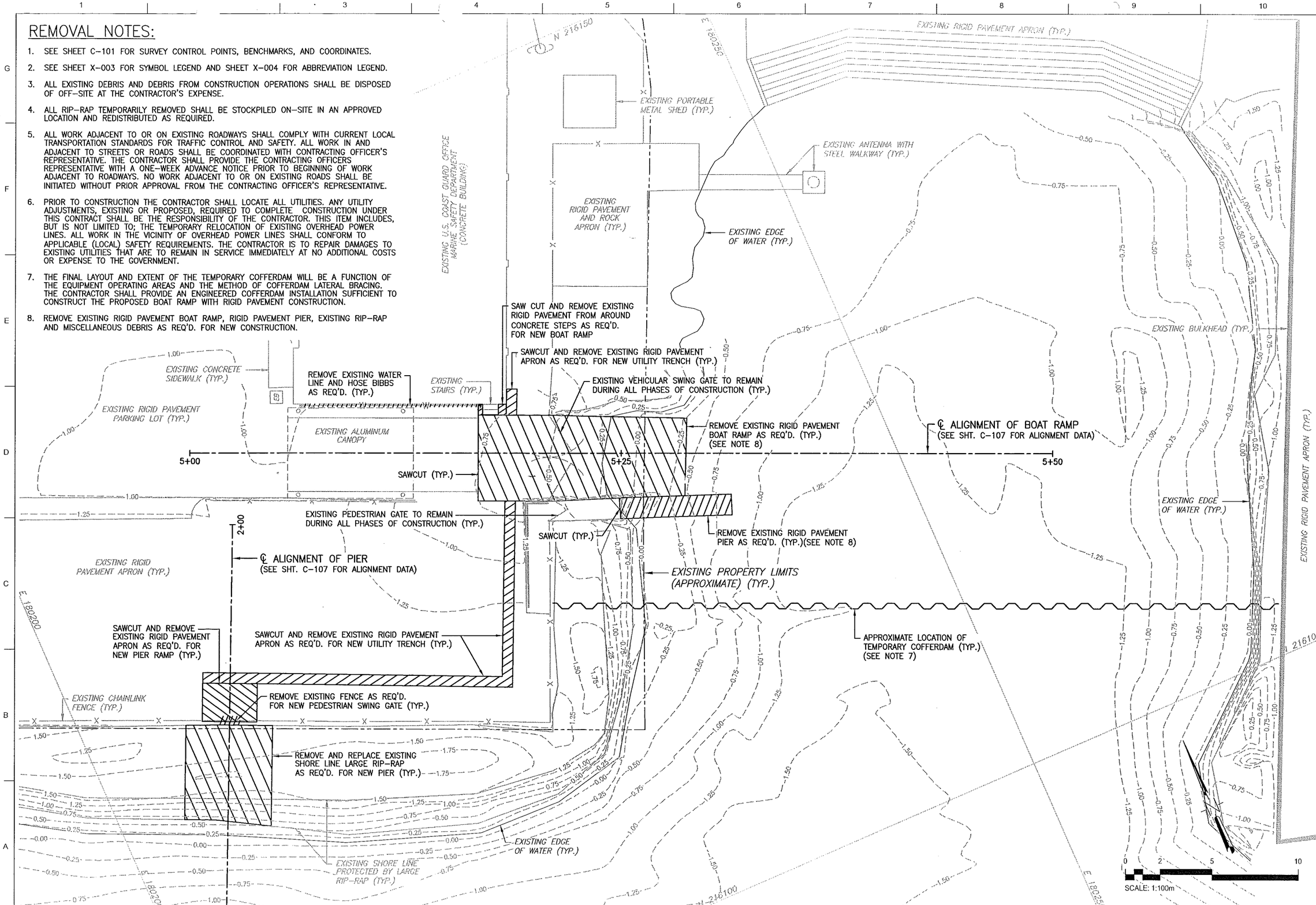

US Army Corps of Engineers

MARK	DESCRIPTION	DATE

DESIGNED BY: T. HYMAN	ISSUE DATE: NOVEMBER 2017
DRAWN BY: J. JOHNSON	SOLICITATION NO.:
CHECKED BY: D. WYATT	CONTRACT NO.:
SUBMITTED BY: T. HYMAN	PROJECT NUMBER: M017EV17
SIZE: ANSI D	FILE NAME: C102EV17.DWG

US ARMY CORPS OF ENGINEERS
MOBILE DISTRICT
MOBILE, ALABAMA

BASKERVILLE-DONOVAN, INC.
ENGINEERS - ARCHITECTS - PLANNERS
CONTAMINATION ASSESSMENT & REMEDIATION
INDUSTRIAL HYGIENISTS
INDUSTRIAL BUILDINGS
Pensacola - Panama City Beach - Gulfport - Mobile - Brewton County - Tampa

PONCE, PUERTO RICO
PONCE MARINE UNIT - PIER & BOAT RAMP REPLACEMENT

EXISTING CONDITIONS AND REMOVAL PLAN

SHEET ID
C-102

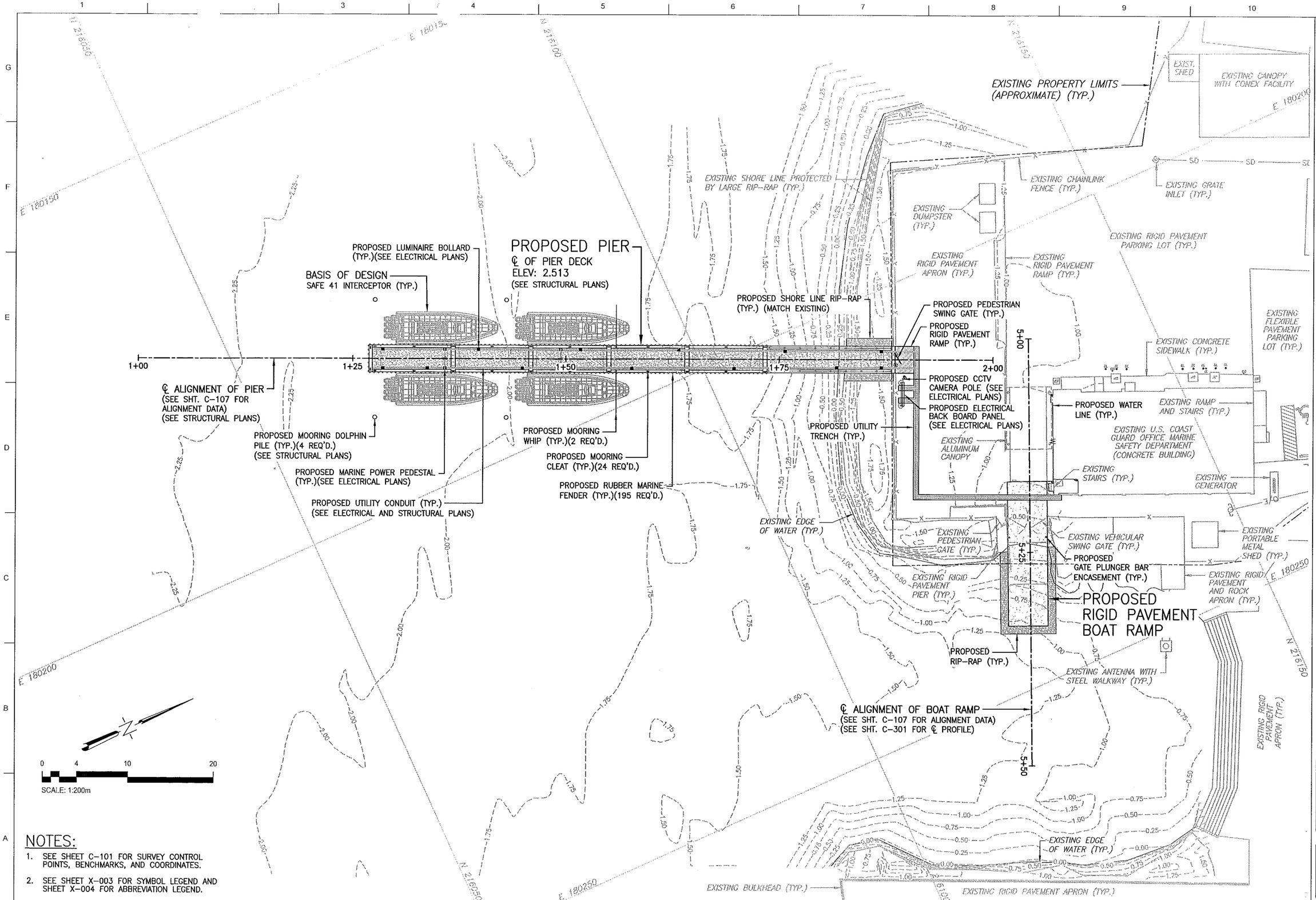

NOTES:

1. SEE SHEET C-101 FOR SURVEY CONTROL POINTS, BENCHMARKS, AND COORDINATES.
2. SEE SHEET X-003 FOR SYMBOL LEGEND AND SHEET X-004 FOR ABBREVIATION LEGEND.

US Army Corps of Engineers®

MARK	DESCRIPTION	DATE

ISSUE DATE: NOVEMBER 2017
SOLICITATION NO.: -
CONTRACT NO.: -
PROJECT NUMBER: M017EV17
FILE NAME: C103EV17.DWG

DESIGNED BY: T. HYMAN
DRAWN BY: J. JOHNSON
CHECKED BY: T. HYMAN
SUBMITTED BY: T. HYMAN
SIZE: ANSI D

US ARMY CORPS OF ENGINEERS
MOBILE DISTRICT
MOBILE, ALABAMA

BASKERVILLE-DONOVAN, INC.
Innovative Infrastructure Solutions.
(251) 342-1011 FAX (251) 342-7251 / 380211
ENGINEERS BUILDERS Ex-00030
Pensacola • Panama City Beach • Tallahassee • Mobile • Brevard County • Tampa

PONCE, PUERTO RICO
PONCE MARINE UNIT - PIER & BOAT RAMP REPLACEMENT

PROJECT OVERVIEW

SHEET ID
C-103

NOTES:

1. SEE SHEET C-101 FOR SURVEY CONTROL POINTS, BENCHMARKS, AND COORDINATES.
2. SEE SHEET X-003 FOR SYMBOL LEGEND AND SHEET X-004 FOR ABBREVIATION LEGEND.

XX DENOTES GEOMETRIC POINT (SEE SHEET C-107 GEOMETRIC POINT DATA TABLE)

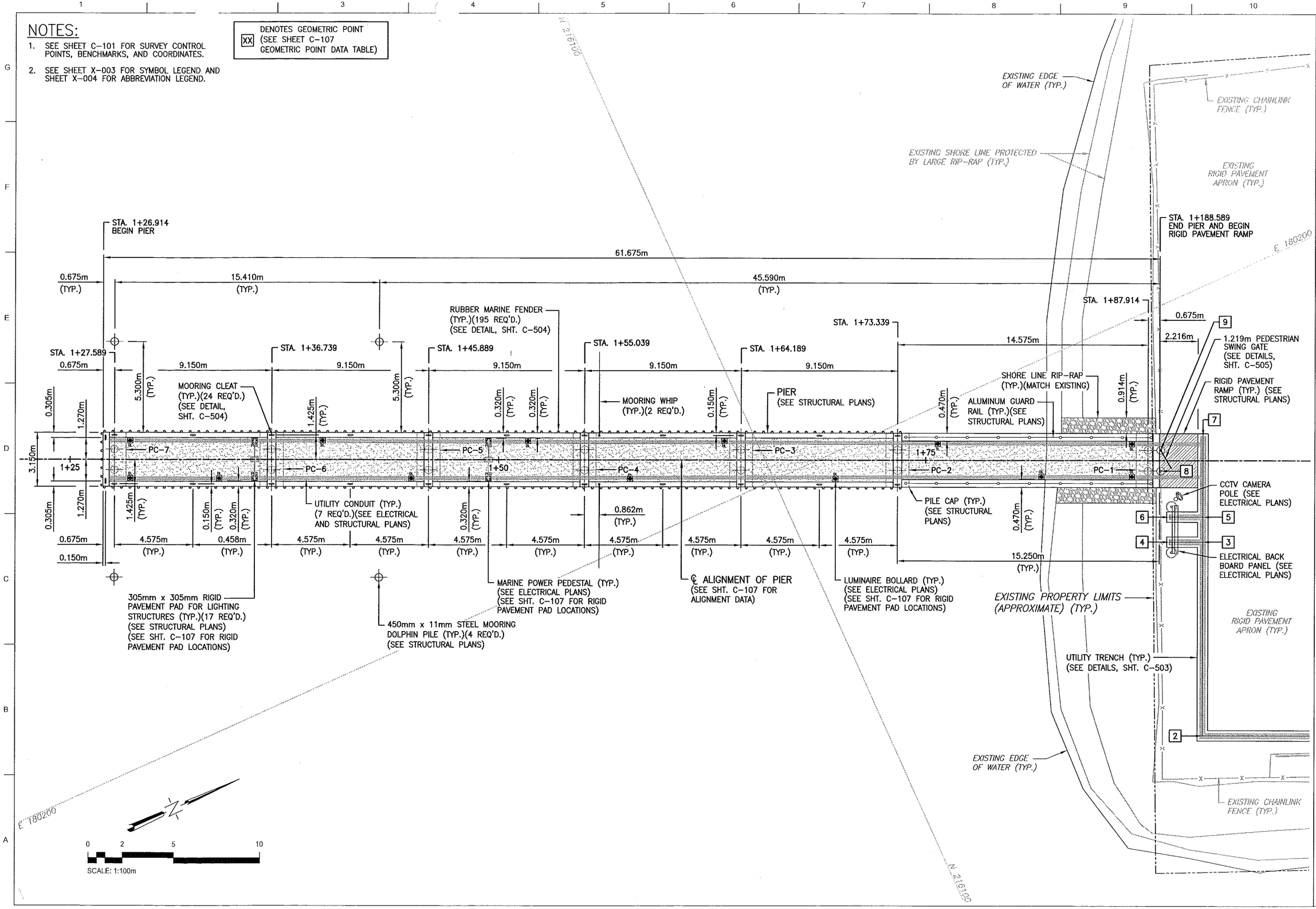

US Army Corps of Engineers

MARK	DESCRIPTION	DATE

ISSUE DATE: NOVEMBER 2017
SOLICITATION NO.: -
CONTRACT NO.: -
PROJECT NUMBER: M017EV17
FILE NAME: C104EV17.DWG

DESIGNED BY: T. HYMAN
DRAWN BY: J. JOHNSON
CHECKED BY: -
SUBMITTED BY: T. HYMAN
SIZE: ANSI D

US ARMY CORPS OF ENGINEERS
MOBILE DISTRICT
MOBILE, ALABAMA

BASKERVILLE-DONOVAN, INC.
Innovative Infrastructure Solutions
201 MONTLEAN PARK, SUITE 100, BIRMINGHAM, AL 35213 (205) 969-3311
ENGINEERING BUSINESS: B.E. #000342
Pensacola • Panama City Beach • Tallahassee • Mobile • Brevard County • Tampa

PONCE, PUERTO RICO
PONCE MARINE UNIT - PIER & BOAT RAMP REPLACEMENT

PIER GEOMETRY AND MOORING CLEAT PLACEMENT PLAN

SHEET ID
C-104

NOTES:

1. SEE SHEET C-101 FOR SURVEY CONTROL POINTS, BENCHMARKS, AND COORDINATES.
2. SEE SHEET X-003 FOR SYMBOL LEGEND AND SHEET X-004 FOR ABBREVIATION LEGEND.
3. CONTRACTOR TO FIELD ADJUST PLACEMENT AND HEIGHT OF GATE PLUNGER BAR ENCASEMENT.

XX DENOTES GEOMETRIC POINT (SEE SHEET C-107 GEOMETRIC POINT DATA TABLE)

SCALE: 1:100m

EXISTING U.S. COAST GUARD OFFICE MARINE SAFETY DEPARTMENT (CONCRETE BUILDING)

EXISTING PORTABLE METAL SHED (TYP.)

EXISTING RIGID PAVEMENT AND ROCK APRON (TYP.)

EXISTING RIGID PAVEMENT APRON (TYP.)

EXISTING ANTENNA WITH STEEL WALKWAY (TYP.)

EXISTING CONCRETE SIDEWALK (TYP.)

EXISTING RIGID PAVEMENT PARKING LOT (TYP.)

EXISTING PROPERTY LIMITS (APPROXIMATE) (TYP.)

3 SLABS @ 4.900m = 14.700m

1.613m±

4.301m±

9.238m±

EXISTING STAIRS (TYP.)

WATER LINE (TYP.)

0.152m (TYP.)

0.914m (TYP.)

RIP-RAP (TYP.) (SEE DETAIL, SHT. C-300)

EXISTING ALUMINUM CANOPY

4.625m (TYP.)

0.800m±

5+25

2.030m (TYP.)

0.914m

℄ ALIGNMENT OF BOAT RAMP (SEE SHT. C-107 FOR ALIGNMENT DATA)

5+00

5+50

4.960m±

4.395m±

2.595m (TYP.)

RIGID PAVEMENT BOAT RAMP (SEE PAVEMENT SECTION, C-300)

EXISTING RIGID PAVEMENT RAMP (TYP.)

EXISTING CHAINLINK FENCE (TYP.)

3.779m±

0.358m±

2+00

8.727m±

1.553m

GATE PLUNGER BAR ENCASEMENT (TYP.) (SEE DETAIL, SHT, C-502)(SEE NOTE 3)

℄ ALIGNMENT OF PIER (SEE SHT. C-107 FOR ALIGNMENT DATA)

EXISTING RIGID PAVEMENT PIER (TYP.)

EXISTING RIGID PAVEMENT APRON (TYP.)

RIGID PAVEMENT RAMP (TYP.) (SEE STRUCTURAL PLANS)

UTILITY TRENCH (TYP.)(SEE DETAILS, SHT. C-503)

EXISTING VEHICULAR SWING GATE (TYP.)

CCTV CAMERA POLE (SEE ELECTRICAL PLANS)

EXISTING PEDESTRIAN GATE (TYP.)

1.219m PEDESTRIAN SWING GATE (SEE DETAILS, SHT. C-505)

1.829m (MIN.) (TYP.)

ELECTRICAL BACK BOARD PANEL (SEE ELECTRICAL PLANS)

EXISTING CHAINLINK FENCE (TYP.)

LUMINAIRE BOLLARD (TYP.) (SEE ELECTRICAL PLANS) (SEE SHT. C-107 FOR RIGID PAVEMENT PAD LOCATIONS)

SHORE LINE RIP-RAP (TYP.)(MATCH EXISTING)

EXISTING SHORE LINE PROTECTED BY LARGE RIP-RAP (TYP.)

EXISTING EDGE OF WATER (TYP.)

PIER (SEE STRUCTURAL PLANS)

EXISTING EDGE OF WATER (TYP.)

N 216150

N 216100

E 180200

E 180250

US Army Corps of Engineers®

MARK	DESCRIPTION	DATE

DESIGNED BY: T. HYMAN
DRAWN BY: J. JOHNSON
CHECKED BY: D. WYCOFF
SUBMITTED BY: T. HYMAN
SIZE: ANSI D
FILE NAME: C-105EV17.DWG
ISSUE DATE: NOVEMBER 2017
SOLICITATION NO.: -
CONTRACT NO.: -
PROJECT NUMBER: M017EV17

US ARMY CORPS OF ENGINEERS
MOBILE DISTRICT
MOBILE, ALABAMA

BASKERVILLE-DONOVAN, INC.
Innovative Infrastructure Solutions
1201 Pensacola Blvd, Pensacola, FL 32505 (850) 432-1500
ENGINEERING BUSINESS #8-000080
Pensacola - Panama City Beach - Tallahassee - Mobile - Brevard County - Tampa

PONCE, PUERTO RICO
PONCE MARINE UNIT - PIER & BOAT RAMP REPLACEMENT

BOAT RAMP GEOMETRY PLAN

SHEET ID
C-105

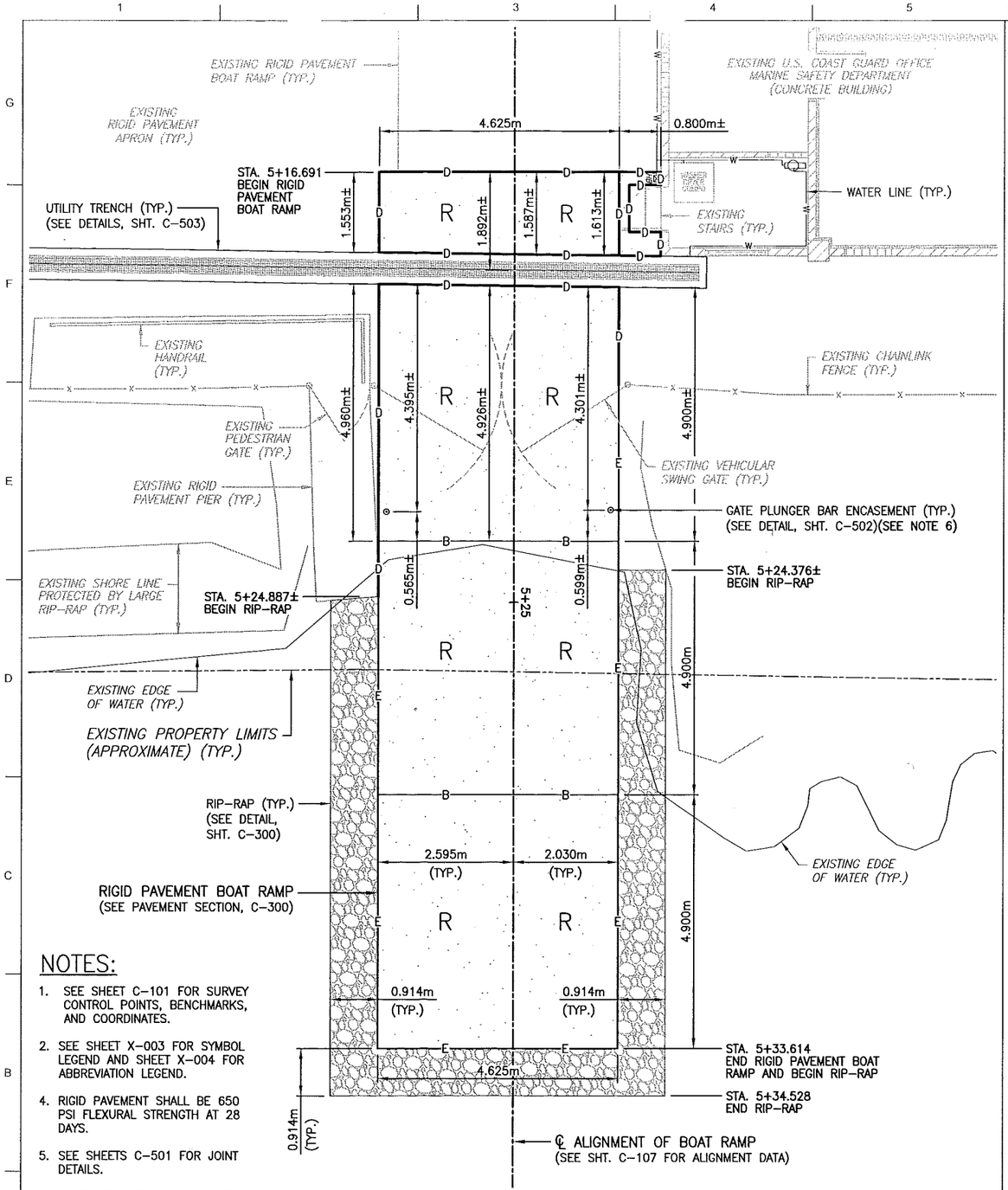

BOAT RAMP JOINT LAYOUT

SCALE: 1:50m

NOTES:

1. SEE SHEET C-101 FOR SURVEY CONTROL POINTS, BENCHMARKS, AND COORDINATES.
2. SEE SHEET X-003 FOR SYMBOL LEGEND AND SHEET X-004 FOR ABBREVIATION LEGEND.
4. RIGID PAVEMENT SHALL BE 650 PSI FLEXURAL STRENGTH AT 28 DAYS.
5. SEE SHEETS C-501 FOR JOINT DETAILS.
6. CONTRACTOR TO FIELD ADJUST PLACEMENT AND HEIGHT OF GATE PLUNGER BAR ENCASEMENT.

JOINT LEGEND	
—B—	DOWELED TRANSVERSE OR LONGITUDINAL CONSTRUCTION JOINT
—D—	THICKENED EDGE EXPANSION JOINT
—E—	THICKENED EDGE BUTT CONSTRUCTION JOINT

R = DENOTES REINFORCED SLABS (SEE REINFORCEMENT NOTES AND DETAILS, SHEET C-501.)

0 1 2.5 5
SCALE: 1:50m

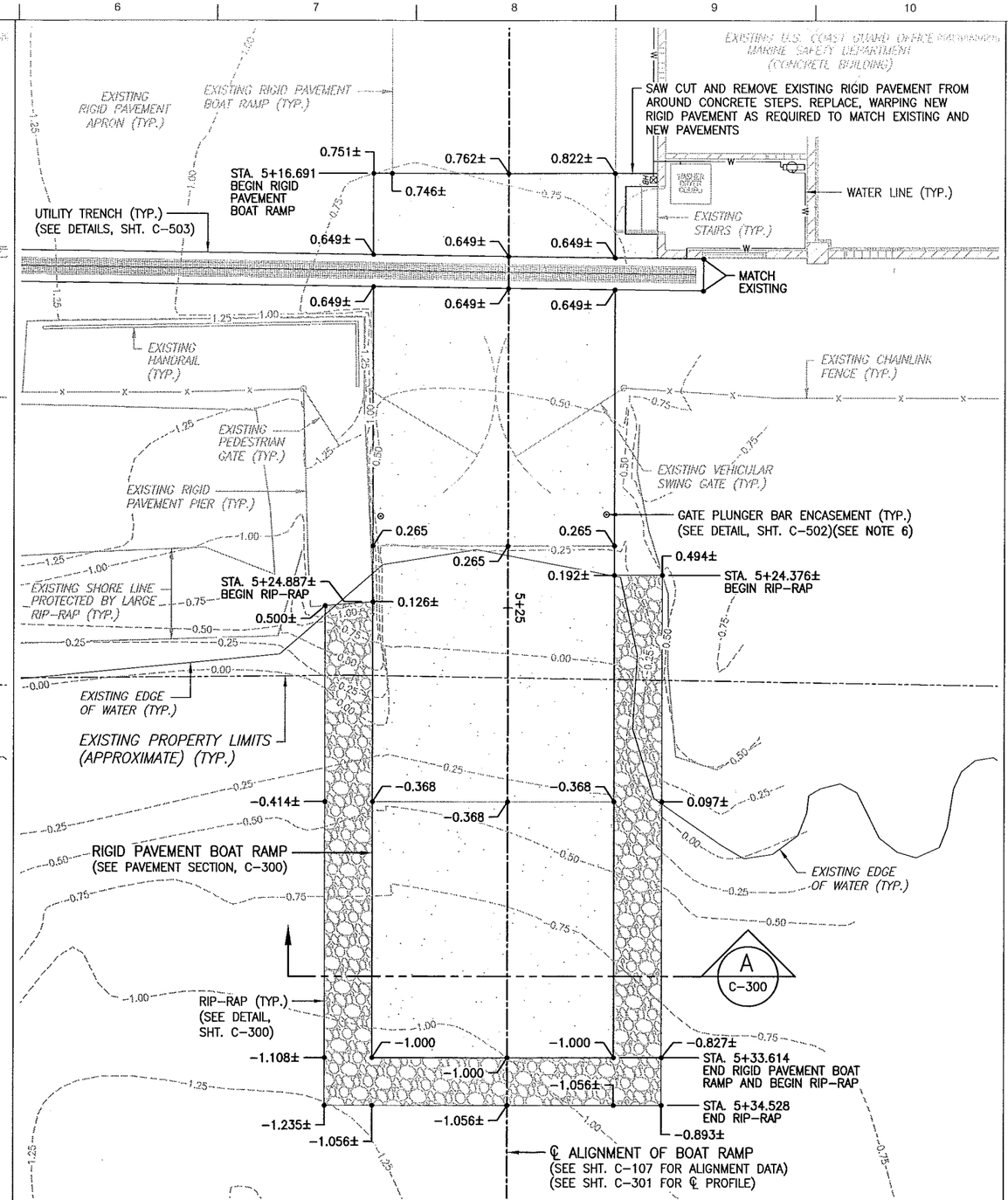

BOAT RAMP GRADING PLAN

SCALE: 1:50m

HIGH WATER LEVEL = 0.75
MEAN WATER LEVEL = 0.00±
LOW WATER LEVEL = -0.75

0 1 2.5 5
SCALE: 1:50m

US Army Corps of Engineers®

MARK	DESCRIPTION	DATE

DESIGNED BY: T. HYMAN
DRAWN BY: J. JOHNSON
CHECKED BY: D. WYATT
SUBMITTED BY: T. HYMAN
SIZE: ANSI D
ISSUE DATE: NOVEMBER 2017
SOLICITATION NO.: -
CONTRACT NO.:
PROJECT NUMBER: M017EV17
FILE NAME: C106EV17.DWG

US ARMY CORPS OF ENGINEERS
MOBILE DISTRICT
MOBILE, ALABAMA

BASKERVILLE-DONOVAN, INC.
Innovative Infrastructure Solutions
(251) 342-1414 FAX (251) 342-7711 FIRM # 530
Pensacola • Panama City Beach • Tallahassee • Mobile • Brewton • Destin • Tampa

PONCE, PUERTO RICO
PONCE MARINE UNIT - PIER & BOAT RAMP REPLACEMENT

BOAT RAMP JOINT LAYOUT AND GRADING PLAN

SHEET ID
C-106

PROPOSED PIER ℄ ALIGNMENT DATA TABLE

STATION	NORTHING	EASTING	DESCRIPTION
1+00.000	216040.281	180171.601	BEGIN ℄ ALIGNMENT
1+25.000	216063.044	180181.938	
1+26.914	216064.786	180182.730	BEGIN ℄ OF PIER
1+27.589	216065.401	180183.009	℄ OF PILE CAP 7
1+35.753	216072.834	180186.384	℄ OF WATER LINE JUNCTION BOX
1+36.739	216073.732	180186.792	℄ OF PILE CAP 6
1+45.889	216082.063	180190.575	℄ OF PILE CAP 5
1+49.404	216085.264	180192.029	℄ OF WATER LINE JUNCTION BOX
1+50.000	216085.807	180192.275	
1+55.039	216090.395	180194.358	℄ OF PILE CAP 4
1+64.189	216098.726	180198.142	℄ OF PILE CAP 3
1+73.339	216107.057	180201.925	℄ OF PILE CAP 2
1+75.000	216108.570	180202.612	
1+87.914	216120.328	180207.951	℄ OF PILE CAP 1
1+88.181	216120.572	180208.062	PROPERTY LINE (APPROXIMATE)
1+88.589	216120.943	180208.230	END ℄ OF PIER AND BEGIN ℄ OF RIGID PAVEMENT RAMP
1+88.654	216121.002	180208.257	PEDESTRIAN GATE
1+90.805	216122.960	180209.146	END ℄ OF RIGID PAVEMENT RAMP AND BEGIN UTILITY TRENCH
1+91.109	216123.237	180209.272	℄ OF UTILITY TRENCH
1+91.414	216123.515	180209.398	END UTILITY TRENCH
2+00.000	216131.332	180212.948	END ℄ ALIGNMENT

PROPOSED BOAT RAMP ℄ ALIGNMENT DATA TABLE

STATION	NORTHING	EASTING	DESCRIPTION
5+00.000	216136.124	180212.365	BEGIN ℄ ALIGNMENT
5+05.640	216133.859	180217.531	BEGIN EXISTING CANOPY
5+12.912	216130.939	180224.190	END EXISTING CANOPY
5+16.691	216129.421	180227.651	BEGIN ℄ OF RIGID PAVEMENT BOAT RAMP
5+18.278	216128.784	180229.104	END ℄ OF RIGID PAVEMENT BOAT RAMP AND BEGIN UTILITY TRENCH
5+18.582	216128.661	180229.384	℄ OF UTILITY TRENCH
5+18.887	216128.539	180229.663	END UTILITY TRENCH AND BEGIN ℄ OF RIGID PAVEMENT BOAT RAMP
5+20.804	216127.769	180231.418	EXISTING CHAINLINK DOUBLE SWING GATE
5+23.814	216126.561	180234.174	RIGID PAVEMENT JOINT
5+25.000	216126.084	180235.261	
5+26.340	216125.546	180236.488	PROPERTY LINE (APPROXIMATE)
5+28.714	216124.593	180238.662	RIGID PAVEMENT JOINT
5+33.614	216122.625	180243.150	END ℄ OF RIGID PAVEMENT BOAT RAMP AND BEGIN RIP–RAP
5+34.528	216122.258	180243.987	END RIP–RAP
5+50.000	216116.045	180258.156	END ℄ ALIGNMENT

GEOMETRIC POINT DATA TABLE

SYMBOL NO. XX	NORTHING	EASTING	DESCRIPTION
1	216131.905	180230.856	BEGIN ℄ OF UTILITY TRENCH
2	216116.593	180223.903	90° BEND ℄ OF UTILITY TRENCH
3	216121.271	180213.602	TEE ℄ OF UTILITY TRENCH
4	216119.502	180212.798	END ℄ OF UTILITY TRENCH
5	216121.875	180212.272	TEE ℄ OF UTILITY TRENCH
6	216120.106	180211.469	END ℄ OF UTILITY TRENCH
7	216123.826	180207.977	END ℄ OF UTILITY TRENCH
8	216120.752	180208.813	PEDESTRIAN GATE
9	216121.252	180207.701	PEDESTRIAN GATE

PROPOSED PIER LIGHTING PAD LOCATION DATA TABLE

STATION	NORTHING	EASTING	DESCRIPTION
1+28.518, 1.103 LT	216066.703	180182.389	℄ OF LED BOLLARD RIGID PAVEMENT PAD
1+28.518, 1.103 RT	216065.791	180184.397	℄ OF LED BOLLARD RIGID PAVEMENT PAD
1+33.711, 1.103 RT	216070.519	180186.544	℄ OF LED BOLLARD RIGID PAVEMENT PAD
1+35.753, 1.103 RT	216072.378	180187.388	℄ OF MARINE POWER PEDESTAL RIGID PAVEMENT PAD
1+35.753, 1.103 LT	216073.290	180185.380	℄ OF MARINE POWER PEDESTAL RIGID PAVEMENT PAD
1+39.712, 1.103 LT	216076.895	180187.017	℄ OF LED BOLLARD RIGID PAVEMENT PAD
1+44.894, 1.103 RT	216080.702	180191.168	℄ OF LED BOLLARD RIGID PAVEMENT PAD
1+49.404, 1.103 RT	216084.808	180193.032	℄ OF MARINE POWER PEDESTAL RIGID PAVEMENT PAD
1+49.404, 1.103 LT	216085.720	180191.025	℄ OF MARINE POWER PEDESTAL RIGID PAVEMENT PAD
1+51.722, 1.103 LT	216087.830	180191.983	℄ OF LED BOLLARD RIGID PAVEMENT PAD
1+57.712, 1.103 RT	216092.373	180196.468	℄ OF LED BOLLARD RIGID PAVEMENT PAD
1+63.211, 1.103 LT	216098.292	180196.733	℄ OF LED BOLLARD RIGID PAVEMENT PAD
1+69.715, 1.103 RT	216103.302	180201.430	℄ OF LED BOLLARD RIGID PAVEMENT PAD
1+75.703, 0.953 LT	216109.603	180202.035	℄ OF LED BOLLARD RIGID PAVEMENT PAD
1+81.726, 0.953 RT	216114.300	180206.260	℄ OF LED BOLLARD RIGID PAVEMENT PAD
1+86.992, 0.953 RT	216119.094	180208.437	℄ OF LED BOLLARD RIGID PAVEMENT PAD
1+86.992, 0.953 LT	216119.882	180206.702	℄ OF LED BOLLARD RIGID PAVEMENT PAD

NOTES:

1. LT DENOTES LEFT OFFSET
2. RT DENOTES RIGHT OFFSET

US Army Corps of Engineers®

MARK	DESCRIPTION	DATE

DESIGNED BY: T. HYMAN
DRAWN BY: J. JOHNSON
CHECKED BY: D. WYATT
SUBMITTED BY: T. HYMAN
SIZE: ANSI D
ISSUE DATE: NOVEMBER 2017
SOLICITATION NO.: -
CONTRACT NO.: -
PROJECT NUMBER: M017EV17
FILE NAME: C107EV17.DWG

US ARMY CORPS OF ENGINEERS
MOBILE DISTRICT
MOBILE, ALABAMA

BASKERVILLE-DONOVAN, INC.
DESIGN AND ENGINEERING CONSULTANTS
1201 MONTLAMAR DRIVE, JEFF. BA MOBILE, AL 36609 (251) 343-0111
ENGINEERING BUSINESS #B-000292
Pensacola - Panama City Beach - Destin/Miramar - Mobile - Brevard County - Tampa

PONCE, PUERTO RICO
PONCE MARINE UNIT - PIER & BOAT RAMP REPLACEMENT

ALIGNMENT DATA TABLES AND GEOMETRIC DATA TABLES

SHEET ID
C-107

NOTES:

1. SEE SHEET C-101 FOR SURVEY CONTROL POINTS, BENCHMARKS, AND COORDINATES.
2. SEE SHEET X-003 FOR SYMBOL LEGEND AND SHEET X-004 FOR ABBREVIATION LEGEND.
3. ELEVATIONS FOR TOP OF ALL RIGID PAVEMENT PADS FOR LIGHTING STRUCTURES TO BE 2.600.

HIGH WATER LEVEL = 0.75
MEAN WATER LEVEL = 0.00±
LOW WATER LEVEL = -0.75

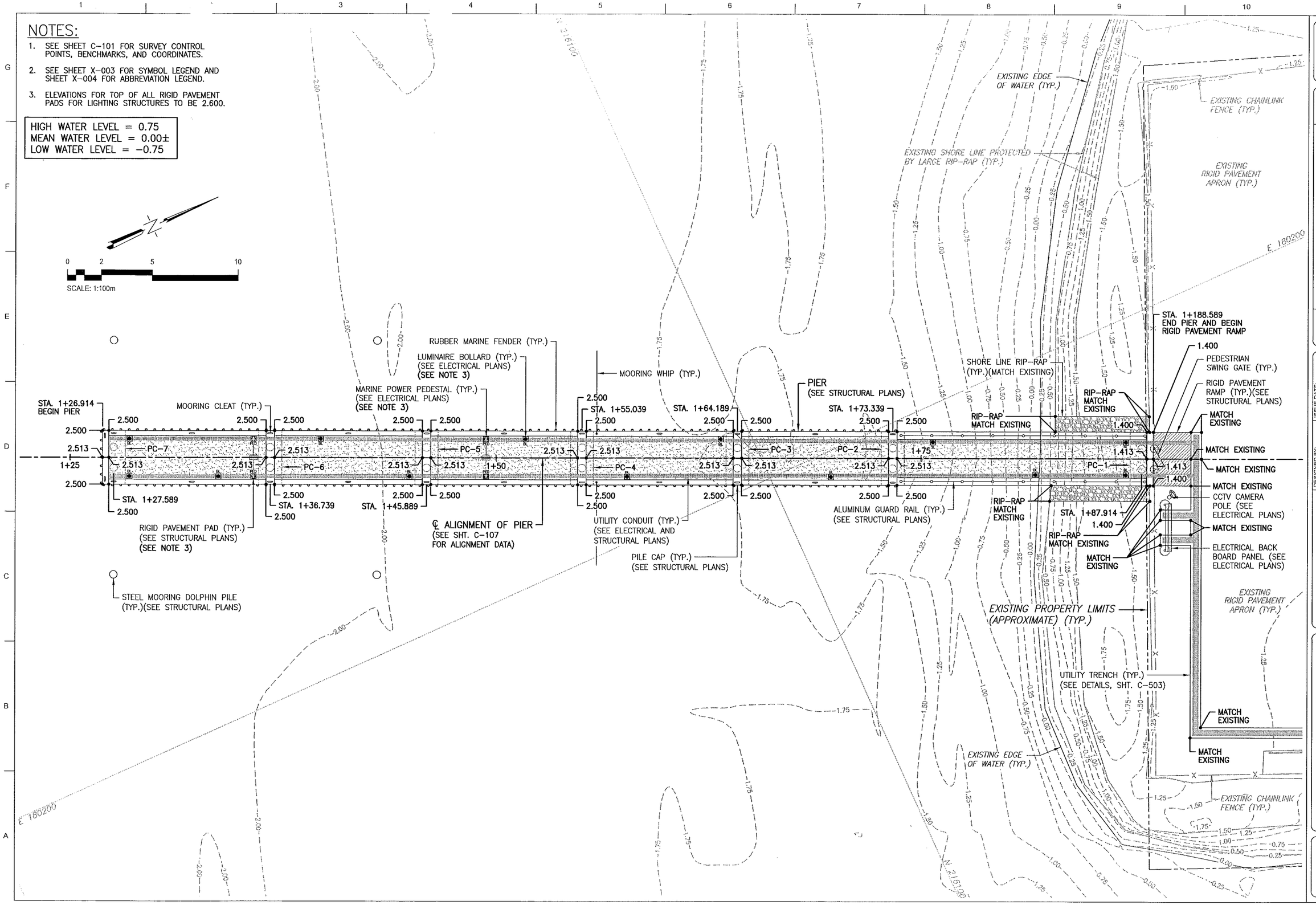

US Army Corps of Engineers

MARK	DESCRIPTION	DATE

ISSUE DATE: NOVEMBER 2017
SOLICITATION NO.:
CONTRACT NO.:
PROJECT NUMBER: M017EV17
DESIGNED BY: T. HYMAN
DRAWN BY: J. JOHNSON
CHECKED BY: C. HYMAN
SUBMITTED BY: T. HYMAN
SIZE: ANSI D
FILE NAME: C108EV17.DWG

US ARMY CORPS OF ENGINEERS
MOBILE DISTRICT
MOBILE, ALABAMA

BASKERVILLE-DONOVAN, INC.
Innovative Infrastructure Solutions
EST. 1940 ENGINEERS • ARCHITECTS • PLANNERS
ENGINEERING BUSINESS 69-00035
Pensacola • Panama City Beach • Tallahassee • Mobile • Brevard County • Tampa

PONCE, PUERTO RICO
PONCE MARINE UNIT - PIER & BOAT RAMP REPLACEMENT

PIER GRADING PLAN

SHEET ID
C-108

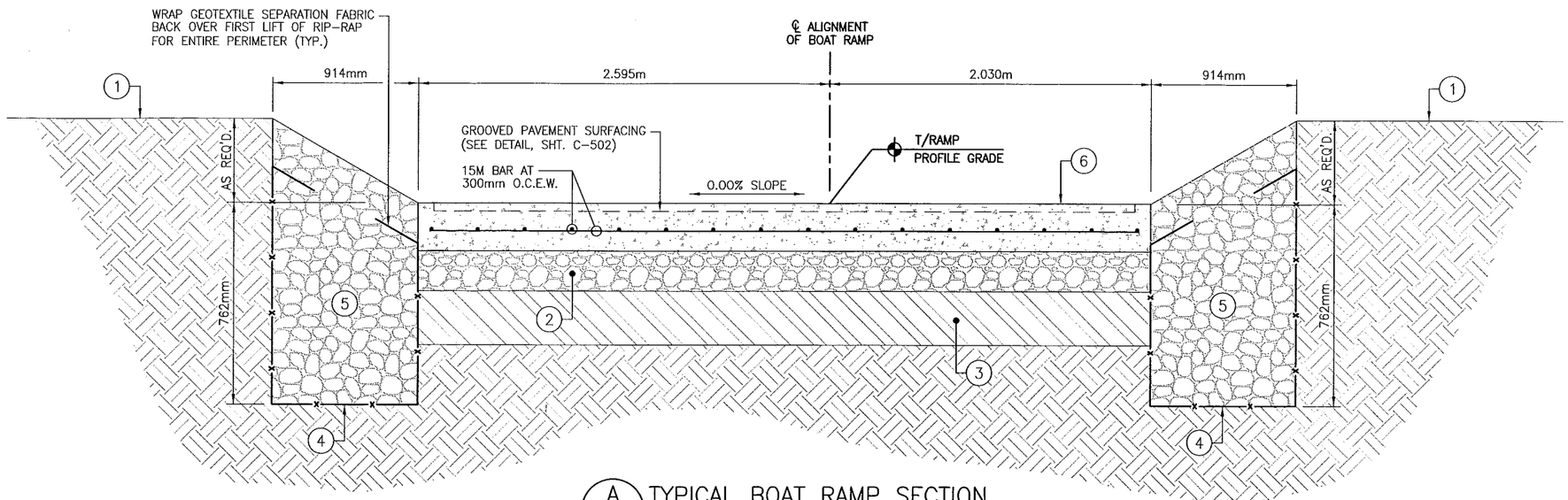

A C-106 TYPICAL BOAT RAMP SECTION

N.T.S.

BOAT RAMP SECTION LEGEND:

1. EXISTING BOTTOM PROFILE, UNDERCUT TO BE FIELD DETERMINED BASED ON ON-SITE GEOTECHNICAL RECOMMENDATIONS
2. 152mm GRADED CRUSHED AGGREGATE BASE COURSE, COMPACT TO 95% OF MAXIMUM DRY DENSITY PER ASTM D-1557, MINIMUM CBR 80%
3. COMPACTED SUBGRADE, COMPACT TO 95% OF MAXIMUM DRY DENSITY PER ASTM D-1557
4. GEOTEXTILE SEPARATION FABRIC SEE SPECIFICATION 31 00 00 EARTHWORK
5. STONE RUBBLE BACKFILL (RIP-RAP), SEE SPECIFICATION 31 00 00 EARTHWORK
6. 180mm REINFORCED RIGID PAVEMENT RAMP SLAB, GROOVED

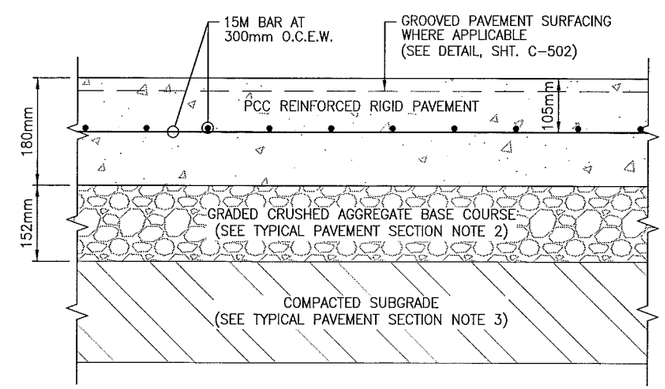

TYPICAL PCC RIGID PAVEMENT BOAT RAMP SECTION

N.T.S.

TYPICAL PAVEMENT SECTION NOTES:

1. PAVEMENT THICKNESS 180mm
2. BASE COURSE THICKNESS 152mm, COMPACT TO 95% OF MAXIMUM DRY DENSITY PER ASTM D-1557, MINIMUM CBR 80%
3. SUBGRADE, COMPACT TO 95% OF MAXIMUM DRY DENSITY PER ASTM D-1557

US Army Corps of Engineers

MARK	DESCRIPTION	DATE

DESIGNED BY: T. HYMAN
DRAWN BY: J. JOHNSON
CHECKED BY: D. WYATT
SUBMITTED BY: T. HYMAN
SIZE: ANSI_D
ISSUE DATE: NOVEMBER 2017
SOLICITATION NO.: -
CONTRACT NO.: -
PROJECT NUMBER: M017EV17
FILE NAME: C300EV17.DWG

US ARMY CORPS OF ENGINEERS
MOBILE DISTRICT
MOBILE, ALABAMA

BASKERVILLE-DONOVAN, INC.
Innovative Infrastructure Solutions
DESIGN-BUILD • CIVIL • MARINE • ENVIRONMENTAL
ENGINEERING BUSINESS # 5-00-0242 (251) 300-0311
Pensacola • Panama City Beach • Tallahassee • Mobile • Brevard County • Tampa

PONCE, PUERTO RICO
PONCE MARINE UNIT - PIER & BOAT RAMP REPLACEMENT

BOAT RAMP TYPICAL PAVEMENT SECTION

SHEET ID
C-300

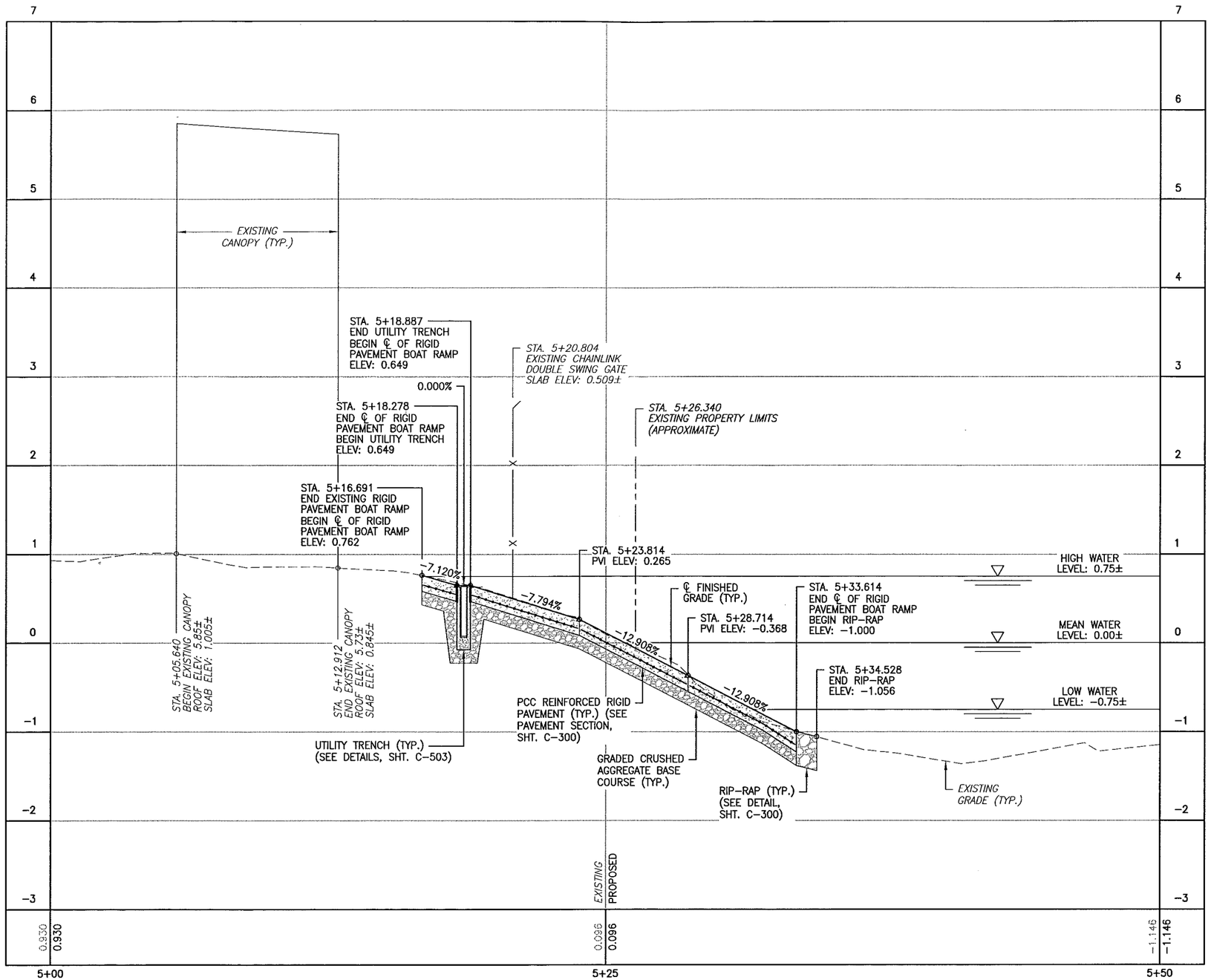

℄ PROFILE OF BOAT RAMP

SCALE : 1:100 HORZ.
1:25 VERT.

HORIZONTAL

0 2 5 10

SCALE: 1:100m

VERTICAL

0 5 12.5 25

SCALE: 1:25m

NOTES:

1. SEE SHEET C-101 FOR SURVEY CONTROL POINTS, BENCHMARKS, AND COORDINATES.
2. SEE SHEET X-003 FOR SYMBOL LEGEND AND SHEET X-004 FOR ABBREVIATION LEGEND.

US Army Corps of Engineers

MARK	DESCRIPTION	DATE

DESIGNED BY: T. HYMAN
DRAWN BY: J. JOHNSON
CHECKED BY: SUBMITTED BY: T. HYMAN
SIZE: ANSI D
ISSUE DATE: NOVEMBER 2017
SOLICITATION NO.: -
CONTRACT NO.: -
PROJECT NUMBER: M017EV17
FILE NAME: C301EV17.DWG

US ARMY CORPS OF ENGINEERS
MOBILE DISTRICT
MOBILE, ALABAMA

BASKERVILLE-DONOVAN, INC.
Innovative Infrastructure Solutions
1201 MONTLEAN BOULEVARD, SUITE 101, MOBILE, AL 36609-5540 (251) 380-8311
ENGINEERING & SURVEYING CERTIFICATE OF AUTHORIZATION: EB-0000360
Pensacola - Panama City Beach - Tallahassee - Mobile - Brevard County - Tampa

PONCE, PUERTO RICO
PONCE MARINE UNIT - PIER & BOAT RAMP REPLACEMENT

℄ PROFILE OF BOAT RAMP

SHEET ID
C-301

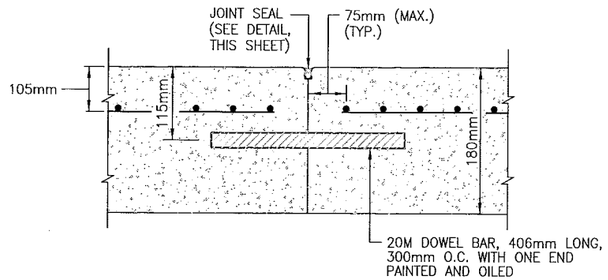

TYPE B
DOWELED TRANSVERSE OR LONGITUDINAL CONSTRUCTION JOINT

N.T.S.

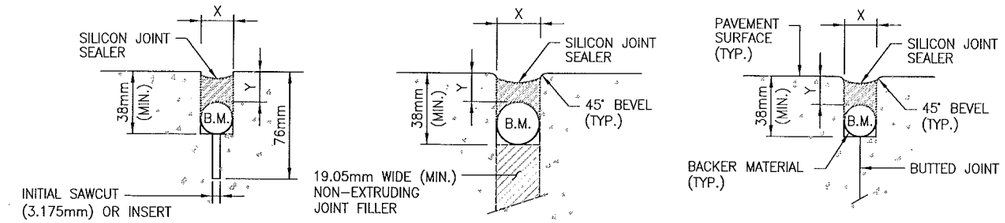

SILICON JOINT SEAL DETAILS

N.T.S.

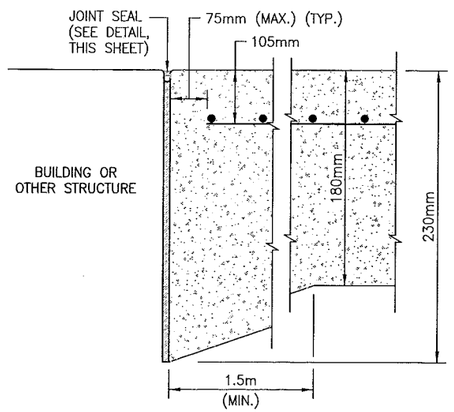

TYPE D
THICKENED EDGE EXPANSION JOINT

N.T.S.

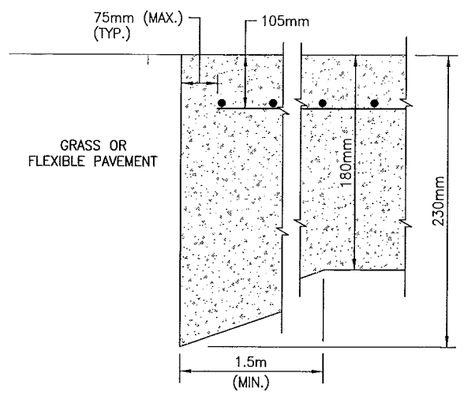

TYPE E
THICKENED EDGE BUTT CONSTRUCTION JOINT

N.T.S.

SILICONE JOINT SEALING DATA				
JOINT TYPE	X		Y	
	MAXIMUM	MINIMUM	MAXIMUM	MINIMUM
CONTRACTION	15.875mm	12.70mm	7.938mm	6.350mm
CONSTRUCTION	15.875mm	12.70mm	7.938mm	6.350mm
EXPANSION	25.40mm±1.586mm	25.40mm±1.586mm	14.288mm	11.113mm
SLIP	15.875mm	12.70mm	7.938mm	6.350mm

* JOINT WIDTH SHALL BE AS INDICATED OR AS PER MANUFACTURER'S RECOMMENDATION FOR SPECIFIED JOINT WIDTHS.

NOTES:

A. NONABSORPTIVE MATERIAL REQUIRED TO PREVENT JOINT SEALANT FROM FLOWING INTO SAWCUT AND TO SEPARATE NONCOMPATIBLE MATERIALS.

B. PREFORMED FILLER MAY BE FIBERBOARD OR OTHER APPROVED MATERIAL WHICH CAN BE SAWED OR SECTION REMOVED TO FORM SEALANT RESERVOIR.

C. TOP OF SEALANT SHALL BE AT LEAST 6.350mm BELOW TOP OF PAVEMENT, BUT NO DEEPER THAN 9.525mm.

D. DIAMETER OF BACKER MATERIAL = X + 3.175mm

E. SILICONE JOINT SEALANT SHALL BE USED FOR SEALING JOINTS. SEE SPECIFICATION 32 01 19.

JOINTS BETWEEN NEW AND EXISTING PAVEMENTS

JOINTS LOCATED BETWEEN NEW AND EXISTING PAVEMENTS SHALL BE THOROUGHLY CLEANED AND PREPPED PRIOR TO REPLACEMENT OF JOINT SEALANT MATERIAL IN CONFORMANCE WITH THE TECHNICAL SPECIFICATIONS.

CARING OF JOINTS AFTER INITIAL SAW CUTS

THE SURFACE SHALL BE RESPRAYED WITH CURING COMPOUND AS SOON AS FREE WATER DISAPPEARS. NECESSARY PRECAUTIONS SHALL BE TAKEN TO INSURE THAT THE CONCRETE IS PROPERLY PROTECTED FROM DAMAGE AND CURED AT SAWED JOINTS. THE TOP OF THE JOINT OPENING AND THE JOINT GROOVE AT EXPOSED EDGES SHALL BE TIGHTLY SEALED WITH CORD BACKER ROD BEFORE THE CONCRETE IN THE REGION OF THE JOINT IS RESPRAYED WITH CURING COMPOUND, AND SHALL BE MAINTAINED UNTIL REMOVED IMMEDIATELY BEFORE SAWING THE JOINT SEALANT RESERVOIR.

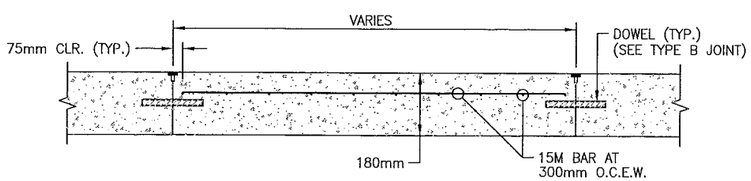

SECTION

REINFORCED SLAB NOTES:

1. REINFORCED PAVEMENT THICKNESS 180mm.
2. STEEL SHALL BE 60 KSI
3. ALL LAPS OF REBAR SHALL BE A MINIMUM 25 BAR DIAMETERS IN LENGTH TIE ALL LAPS.

TYPICAL REINFORCED SLAB DETAIL

N.T.S.

US Army Corps of Engineers

MARK	DESCRIPTION	DATE

DESIGNED BY: T. HYMAN
DRAWN BY: J. JOHNSON
CHECKED BY: D. PRYATT
SUBMITTED BY: T. HYMAN
SIZE: ANSI D
FILE NAME: C501EV17.DWG
ISSUE DATE: NOVEMBER 2017
SOLICITATION NO.: -
CONTRACT NO.: -
PROJECT NUMBER: M017EV17

US ARMY CORPS OF ENGINEERS
MOBILE DISTRICT
MOBILE, ALABAMA

BASKERVILLE-DONOVAN, INC.
INNOVATIVE INFRASTRUCTURE SOLUTIONS
251 NORTH ILLINOIS, SUITE 1800, INDIANAPOLIS, IN 46204-1944(317)
ENGINEERING BUSINESS ID-30034
Pensacola - Panama City Beach - Tallahassee - Mobile - Brevard County - Tampa

PONCE, PUERTO RICO
PONCE MARINE UNIT - PIER & BOAT RAMP REPLACEMENT

REINFORCED RIGID PAVEMENT JOINT, REINFORCEMENT AND JOINT SEALING DETAILS

SHEET ID
C-501

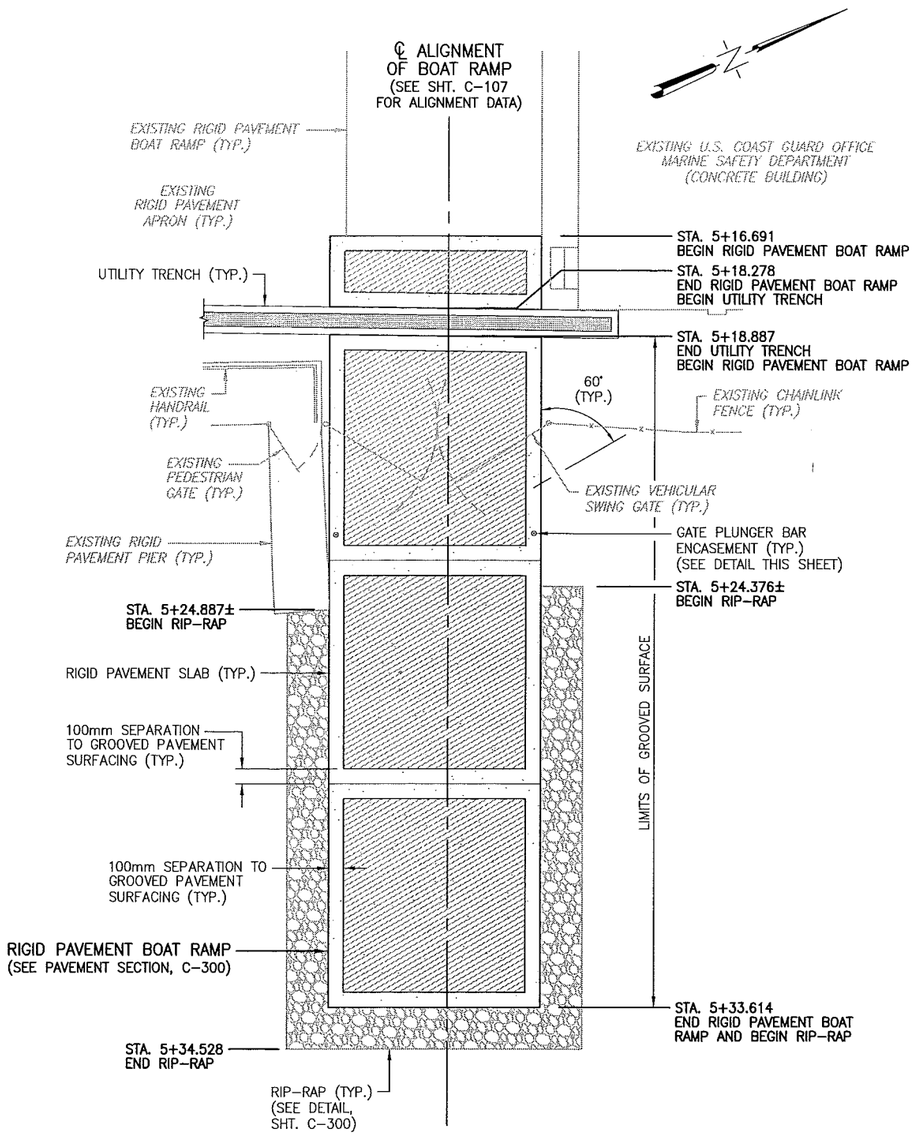

GROOVED PAVEMENT SURFACING PLAN

N.T.S.

TEMPORARY COFFER DAM NOTE:

ITS IS UP TO THE CONTRACTOR TO SELECT THE ACTUAL SHEET PILE AND COFFER DAM CONFIGURATION TO BE USED. (SEE SHEET C-102, NOTE 7)

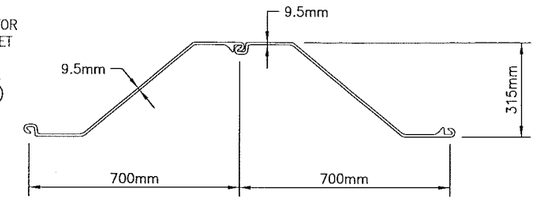

TEMPORARY COFFER DAM AZ-13-700 STEEL SHEET PILING SECTION - BASIS OF DESIGN

SECTIONAL AREA = 135 cm^2/m
SECTIONAL MODULUS = 1305 cm^3/m
MOMENT OF INERTIA = 20,540 cm^4/m
N.T.S.

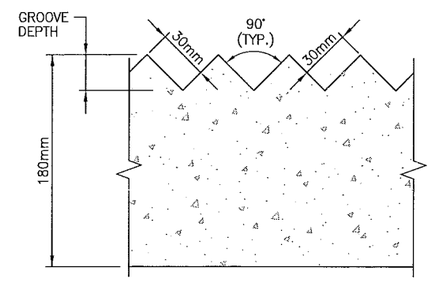

GROOVED PAVEMENT SURFACING SECTION

N.T.S.

GROOVED PAVEMENT SURFACING NOTES:

1. RIGID PAVEMENT WITHIN THE LIMITS SHOWN ON THE PLANS SHALL BE FINISHED WITH A GROOVED SURFACE (90 DEGREE 30mm BY 30mm GROOVES) ALIGNED 60 DEGREES FROM THE RAMP CENTERLINE.
2. THE SURFACE FINISH SHALL BE AS DESCRIBED IN THE CALIFORNIA DEPARTMENT OF BOATING AND WATERWAYS BOATING FACILITIES DIVISION'S LAYOUT, DESIGN AND CONSTRUCTION HANDBOOK FOR SMALL CRAFT BOAT LAUNCHING FACILITIES. THIS HANDBOOK INCLUDES RECOMMENDATION FOR DESIGN AND FABRICATION OF THE GROOVING TOOL AS WELL AS THE GROOVING CONSTRUCTION PROCEDURE.
3. PRIOR TO STARTING WORK ON THE CONCRETE RAMP, THE CONTRACTOR SHALL CONSTRUCT A 1.5m BY 3.0m DEMONSTRATION SLAB SO THAT THE CONTRACTOR'S CHOSEN GROOVING METHODS AND PROCEDURES CAN BE DEMONSTRATED FOR APPROVAL BY THE CONTRACTING OFFICER'S REPRESENTATIVE.
4. GROOVING SHALL NOT BE PERFORMED WITHIN 100mm OF A RIGID PAVEMENT JOINT SEAL.

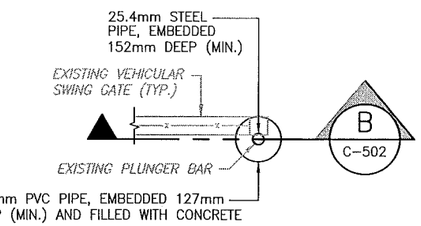

GATE PLUNGER BAR ENCASEMENT DETAIL

N.T.S.

GATE PLUNGER BAR ENCASEMENT NOTE:

CONTRACTOR TO FIELD ADJUST PLACEMENT AND HEIGHT TO WITHIN 25.4mm OF BOTTOM OF EXISTING DOUBLE SWING GATE.

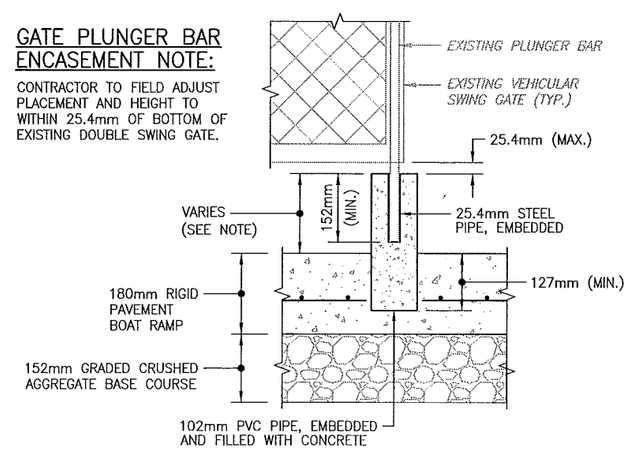

B / C-502 SECTION

N.T.S.

US Army Corps of Engineers

MARK	DESCRIPTION	DATE

DESIGNED BY: T. HYMAN
DRAWN BY: J. JACKSON
CHECKED BY: D. WYATT
SUBMITTED BY: T. HYMAN
SIZE: ANSI D
ISSUE DATE: NOVEMBER 2017
SOLICITATION NO.: -
CONTRACT NO.: -
PROJECT NUMBER: M017EV17
FILE NAME: C502EV17.DWG

US ARMY CORPS OF ENGINEERS
MOBILE DISTRICT
MOBILE, ALABAMA

BASKERVILLE-DONOVAN, INC.
ENGINEERS
251 MONROE AVE., SUITE 400 MEMPHIS, TN 38103-3231
(901) 685-2674
ENGINEERING BUSINESS #A-000342
Pensacola • Panama City Beach • Tallahassee • Mobile • Brevard County • Tampa

PONCE, PUERTO RICO
PONCE MARINE UNIT - PIER & BOAT RAMP REPLACEMENT

MISCELLANEOUS DETAILS

SHEET ID
C-502

NOTE:

CUT HOLE IN BOTTOM OF STEEL UTILITY TRENCH AT THE ANTICIPATED LOWEST ELEVATION. HOLE DIAMETER TO ACCOMMODATE FLANGED FITTING AND 50mm PVC PIPE.

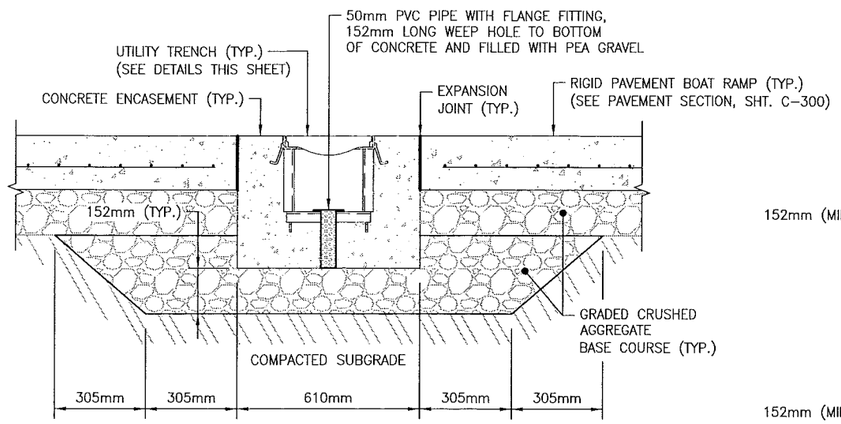

UTILITY TRENCH AT BOAT RAMP

N.T.S.

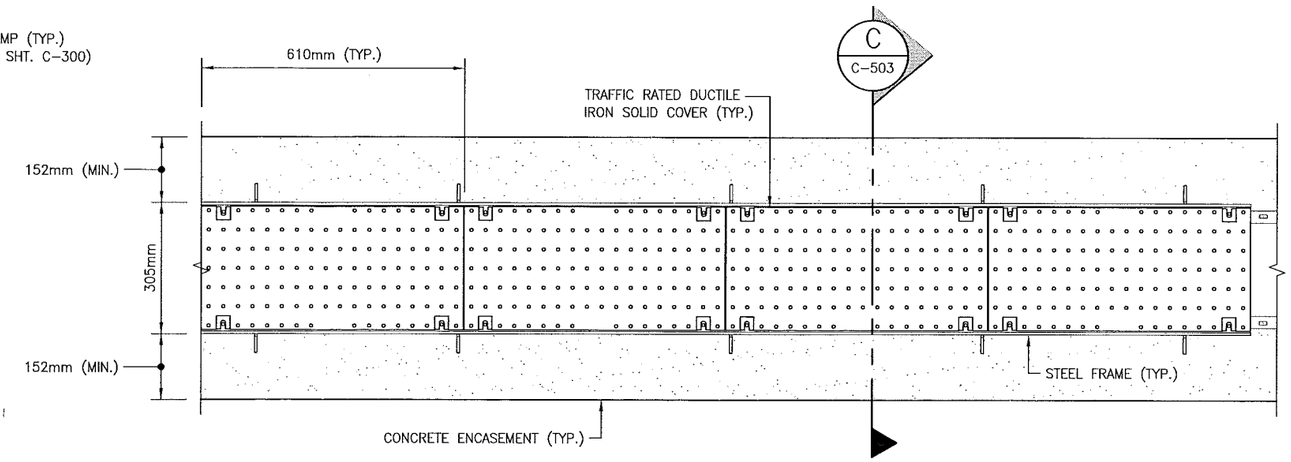

UTILITY TRENCH WITH STEEL FRAME AND COVER – PLAN VIEW

N.T.S.

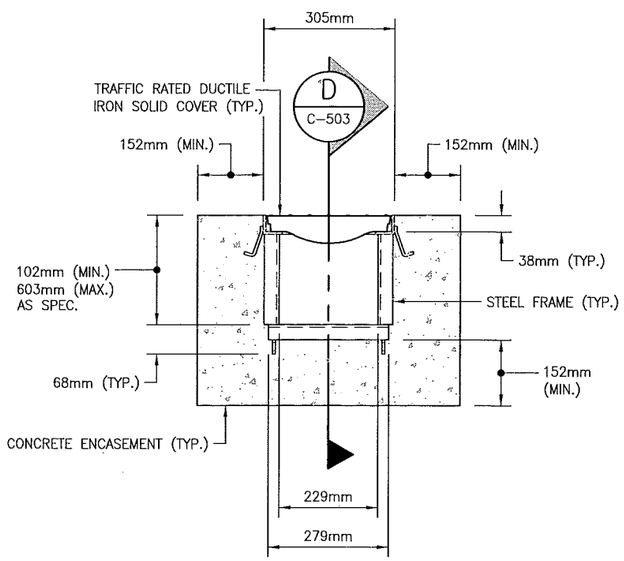

C C-503 SECTION

N.T.S.

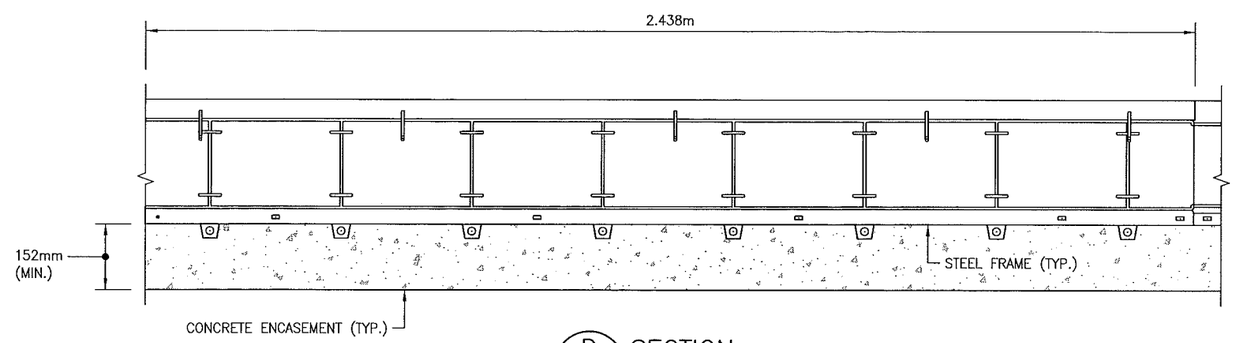

D C-503 SECTION

N.T.S.

UTILITY TRENCH WITH STEEL FRAME AND COVER ZURN MODEL NO. Z874-U-9-HD – BASIS OF DESIGN

N.T.S.

NOTE:

UTILITY TRENCH TO BE INSTALLED PER MANUFACTURES REQUIREMENTS. THIS INCLUDES STEEL MITER CUTS OF TRENCH AND DUCTILE IRON COVERS AT GRADE CHANGES AND WELDING OF TRENCH SECTION TO FORM A SOLID TRENCH PRIOR TO CONCRETE PLACEMENT.

US Army Corps of Engineers®

MARK	DESCRIPTION	DATE

ISSUE DATE: NOVEMBER 2017
SOLICITATION NO.: -
CONTRACT NO.: -
PROJECT NUMBER: M017EV17
FILE NAME: C503EV17.DWG
SIZE: ANSI D

DESIGNED BY: T. HYMAN
DRAWN BY: J. HOWDESHELL
CHECKED BY: D. WYATT
SUBMITTED BY: T. HYMAN

US ARMY CORPS OF ENGINEERS
MOBILE DISTRICT
MOBILE, ALABAMA

BASKERVILLE-DONOVAN, INC.
ENGINEERS
1201 WOODLAND AVENUE, SUITE 600, MOBILE, AL 36609 (251) 343-0211
Pensacola · Panama City Beach · Hattiesburg · Mobile · Brevard County · Tampa

PONCE, PUERTO RICO
PONCE MARINE UNIT - PIER & BOAT RAMP REPLACEMENT

UTILITY TRENCH DETAILS

SHEET ID
C-503

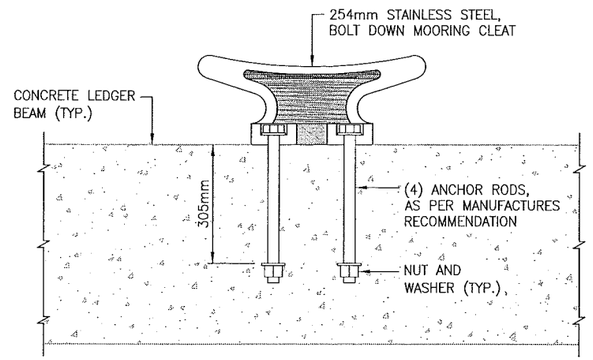

MOORING CLEAT DETAIL

N.T.S.

MOORING CLEAT NOTE:

BOLT HEADS SHOULD BE RECESSED INTO CLEAT SO LINES DO NOT CHAFE AND RECESS SHOULD BE FILLED WITH SILICONE TO PREVENT WATER PONDING AND CORROSION.

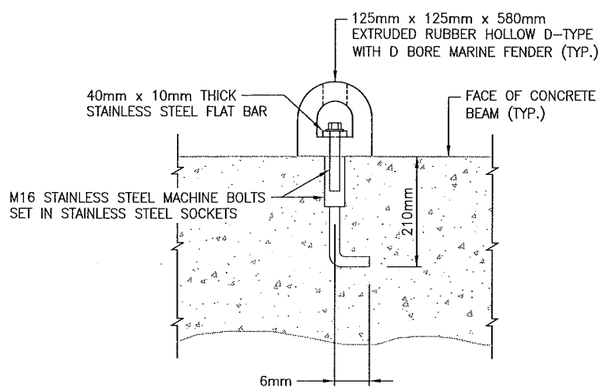

RUBBER MARINE FENDER PLACEMENT DETAIL – SECTION

N.T.S.

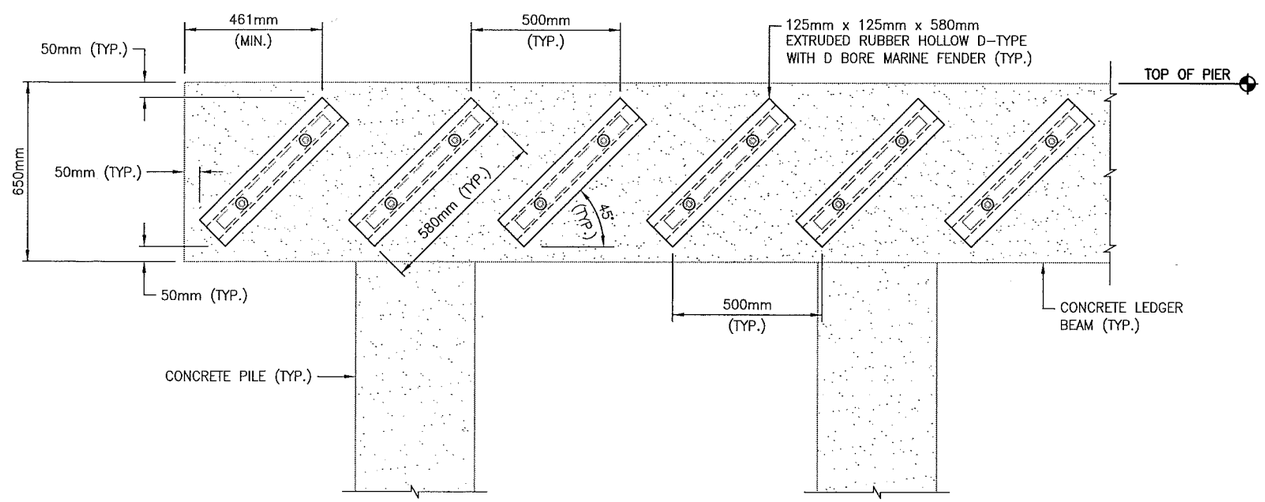

RUBBER MARINE FENDER PLACEMENT DETAIL – ELEVATION

N.T.S.

US Army Corps of Engineers

MARK	DESCRIPTION	DATE

DESIGNED BY: T. HYMAN
DRAWN BY: J. JOHNSON
CHECKED BY: D. WYATT
SUBMITTED BY: T. HYMAN
SIZE: ANSI D
FILE NAME: C504EV17.DWG
ISSUE DATE: NOVEMBER 2017
SOLICITATION NO.: -
CONTRACT NO.: -
PROJECT NUMBER: HOTEV17

US ARMY CORPS OF ENGINEERS
MOBILE DISTRICT
MOBILE, ALABAMA

BASKERVILLE-DONOVAN, INC.
Innovative Infrastructure Solutions
1001 MONTLEAN DRIVE, SUITE B-200, JUPITER, FL 33458 (561) 350-4111
Pensacola - Panama City Beach - Tallahassee - Mobile - Brevard County - Tampa

PONCE, PUERTO RICO
PONCE MARINE UNIT - PIER & BOAT RAMP REPLACEMENT

MISCELLANEOUS DETAILS

SHEET ID
C-504

GENERAL FENCE NOTES:

1. ALL GATE COMPONENTS SHALL BE INCLUDED IN THE FENCE GATE.
2. ALL PLATES TO BE 32mm THICK UNLESS OTHERWISE NOTED.
3. DEVICE MAY BE LOCATED ABOVE OR BELOW HORIZONTAL FRAMING MEMBER WHEN IN CONFLICT WITH STANDARD LOCKING DEVICE.
4. SLOTTED STAPLE STYLES:
   - STYLE A TO BE USED WITH PADLOCKS WITH 19mm THROAT HEIGHT OPENING
   - STYLE B TO BE USED WITH PADLOCKS WITH 29mm THROAT HEIGHT OPENING
   - STYLE C TO BE USED WITH PADLOCKS WITH 25mm THROAT HEIGHT OPENING

   THE TYPE OF PADLOCK THAT WILL BE USED IS WEST MARINE ABUS LOCK NAUTILUS COMBINATION WITH KEYED RESET MODEL #492358. LOCK TO BE PROVIDED BY THE CONTRACTOR. CONTRACTOR SHALL MATCH SLOTTED STAPLE TO LOCK PROVIDED.
5. SWING GATES SHALL BE PROVIDED WITH POSITIVE LOCKING DEVICES TO SECURE GATES IN OPEN POSITION.
6. COMPLETE ASSEMBLY TO BE GALVANIZED COATED.
7. MINIMUM CLEARANCE DIMENSIONS AND GATE SPECIFICS SHALL BE PER FENCE SUBCONTRACTOR SPECIFICATIONS.

PEDESTRIAN SWING GATE NOTES:

1. CONTRACTOR SHALL INSTALL A PEDESTRIAN SWING GATE WITHIN THE EXISTING FENCE LINE. NOT ALL ELEMENTS SHOWN IN THE DETAILS MAY EXIST IN THE CURRENT FENCE. FENCE SUBCONTRACTOR SHALL ADJUST DETAILS AS REQUIRED TO PROVIDE A FULLY FUNCTIONAL AND SECURE GATE WITHIN THE EXISTING FENCE LINE.
2. TRANSITION BARBED WIRE FROM 45° TO VERTICAL.
3. BARBED WIRE SHALL RUN VERTICAL OVER PEDESTRIAN SWING GATE.

GATE LEAF WIDTH	GATE POST (OD)	FABRIC HEIGHT	"A" (DIA.) (MIN.)	"B" DEPTH (MIN.)	"C" POST EMBEDMENT (MIN.)
900mm TO 1.8m	70.7mm	900mm TO 1.5m	305mm	760mm	915mm
		1.8m TO 2.7m	360mm	1m	1.0m
		3m TO 4.3m	405mm	1.2m	1.1m
2.1m TO 4.3m	100mm	900mm TO 1.5m	355mm	965mm	915mm
		1.8m TO 2.7m	405mm	1.1m	1.0m
		3m TO 4.3m	457mm	1.2m	1.1m

GATE POST

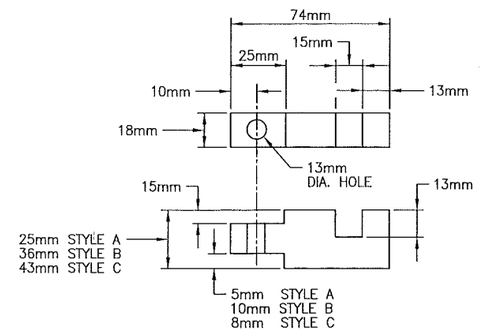

SLOTTED STAPLE DETAIL FOR CHAIN LOCKING SYSTEM

N.T.S.

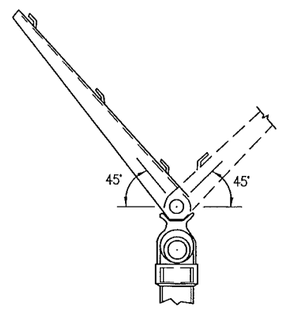

BARBED WIRE SUPPORT ARMS

N.T.S.

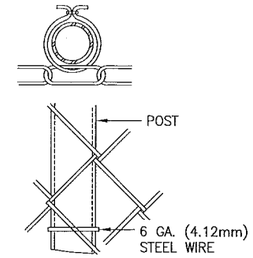

ROUND POST

N.T.S.

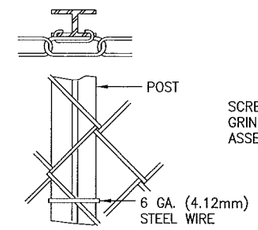

H-BEAM

N.T.S.

LINE POST ATTACHMENTS

N.T.S.

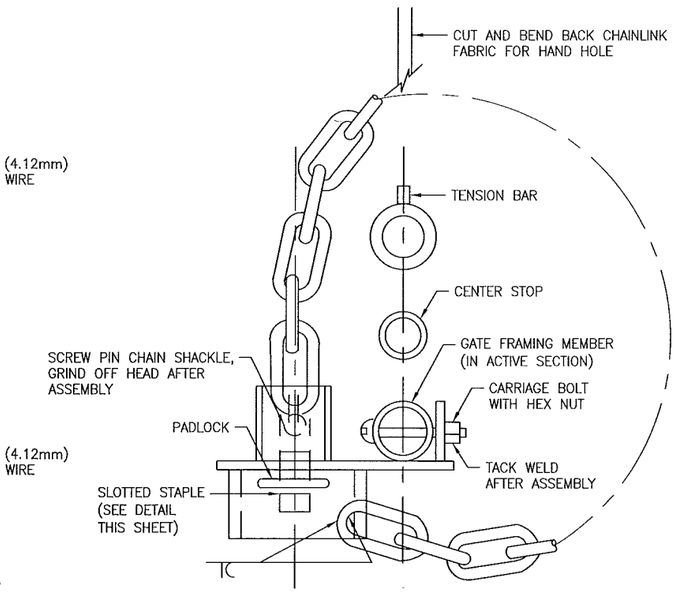

TOP

N.T.S.

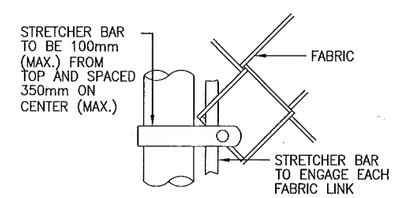

END OR GATE POST

N.T.S.

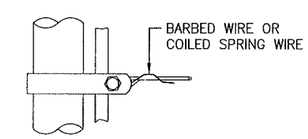

BAND FOR WIRE STRETCHING

N.T.S.

FASTENING DETAILS–FOR TUBULAR POST OR H–COLUMNS

N.T.S.

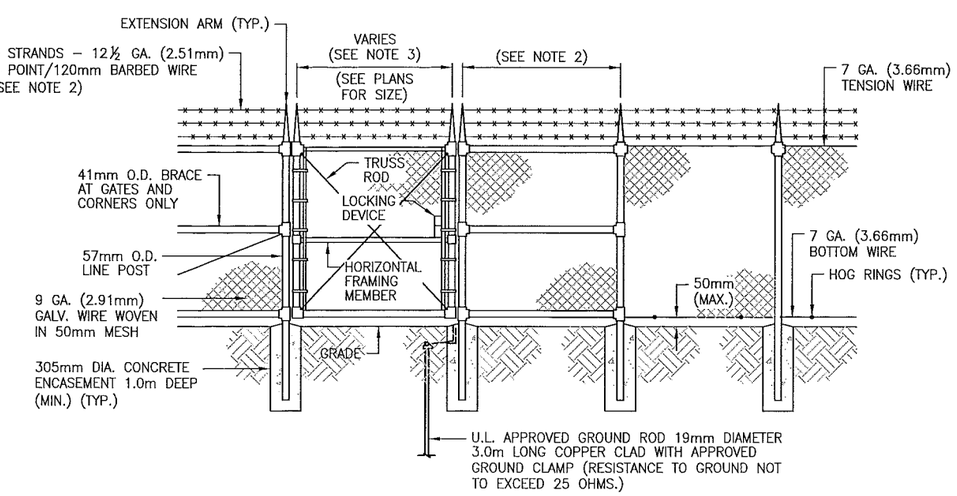

PEDESTRIAN SWING GATE

N.T.S.

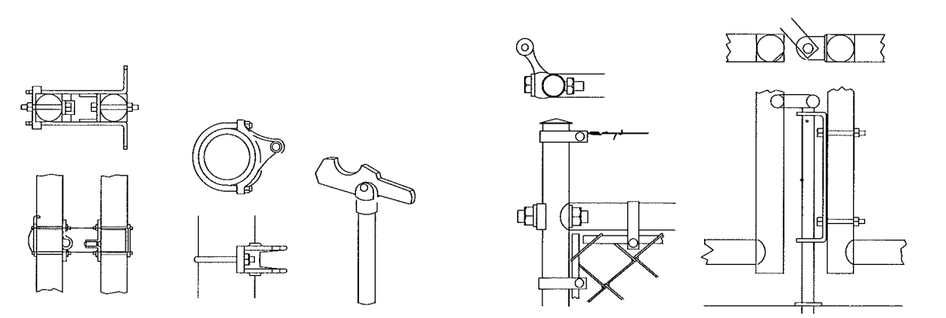

LATCH ASSEMBLY N.T.S. | POST HINGE N.T.S. | GATE KEEPER N.T.S. | GATE FRAME HINGE N.T.S. | DROP BAR ASSEMBLY N.T.S.

SWING GATE DETAILS

N.T.S.

US Army Corps of Engineers®

MARK	DESCRIPTION	DATE

DESIGNED BY: T. HYMAN
DRAWN BY: J. JOHNSON
CHECKED BY: D. WYATT
SUBMITTED BY: T. HYMAN
SIZE: ANSI D
ISSUE DATE: NOVEMBER 2017
SOLICITATION NO.:
CONTRACT NO.:
PROJECT NUMBER: W01TEV17
FILE NAME: C505EV17.DWG

US ARMY CORPS OF ENGINEERS
MOBILE DISTRICT
MOBILE, ALABAMA

BASKERVILLE-DONOVAN, INC.
ENGINEERS • PLANNERS • ENVIRONMENTAL SCIENTISTS
1201 HONY LAMAR DRIVE, SUITE 600, MOBILE, ALABAMA 36609 (251) 343-0511
ENGINEERING BUSINESS ID: 000549
Pensacola · Panama City Beach · Tallahassee · Atlanta · Brevard County · Tampa

PONCE, PUERTO RICO
PONCE MARINE UNIT - PIER & BOAT RAMP REPLACEMENT

MISCELLANEOUS FENCING DETAILS

SHEET ID
C-505

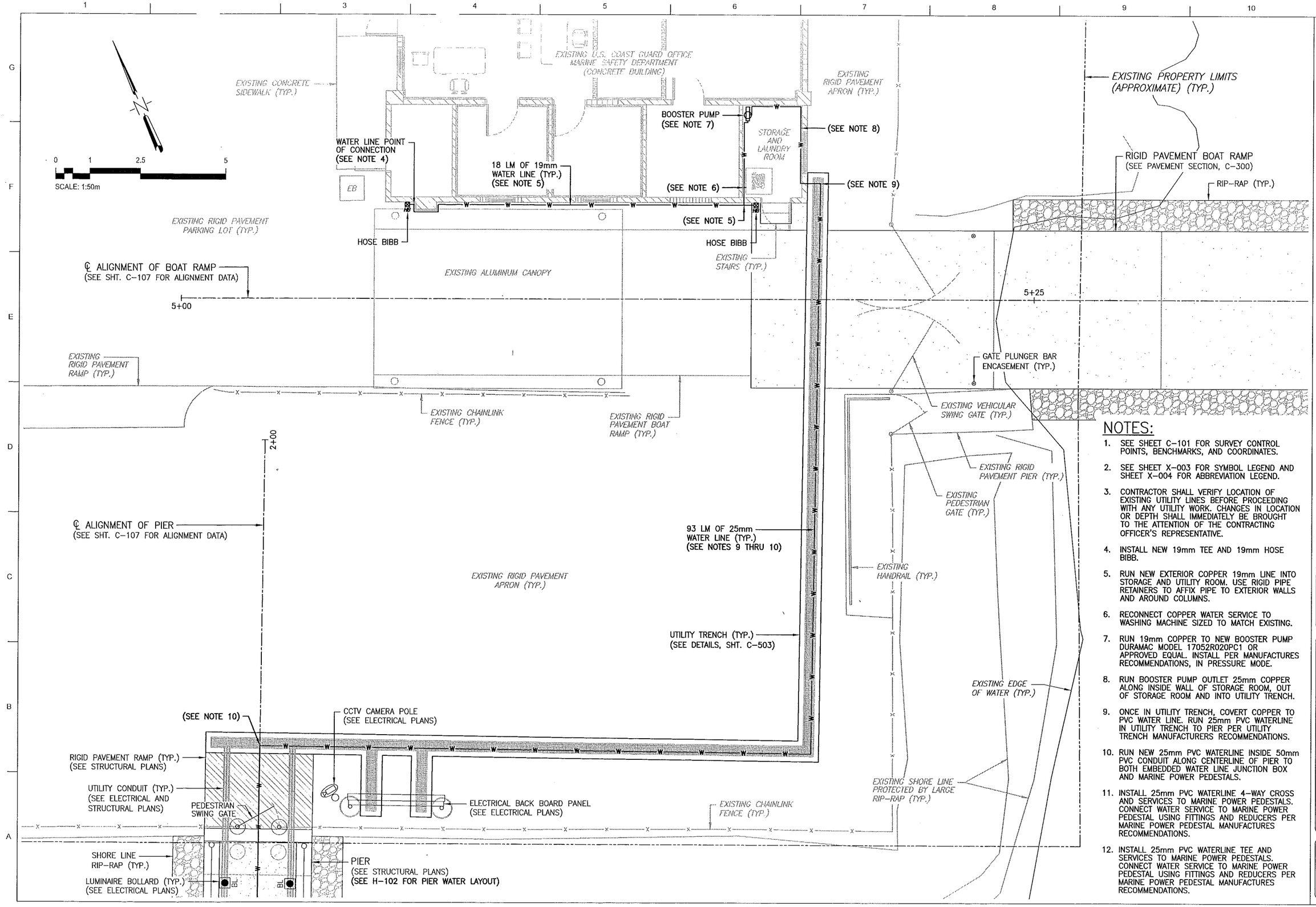

NOTES:

1. SEE SHEET C-101 FOR SURVEY CONTROL POINTS, BENCHMARKS, AND COORDINATES.
2. SEE SHEET X-003 FOR SYMBOL LEGEND AND SHEET X-004 FOR ABBREVIATION LEGEND.
3. CONTRACTOR SHALL VERIFY LOCATION OF EXISTING UTILITY LINES BEFORE PROCEEDING WITH ANY UTILITY WORK. CHANGES IN LOCATION OR DEPTH SHALL IMMEDIATELY BE BROUGHT TO THE ATTENTION OF THE CONTRACTING OFFICER'S REPRESENTATIVE.
4. INSTALL NEW 19mm TEE AND 19mm HOSE BIBB.
5. RUN NEW EXTERIOR COPPER 19mm LINE INTO STORAGE AND UTILITY ROOM. USE RIGID PIPE RETAINERS TO AFFIX PIPE TO EXTERIOR WALLS AND AROUND COLUMNS.
6. RECONNECT COPPER WATER SERVICE TO WASHING MACHINE SIZED TO MATCH EXISTING.
7. RUN 19mm COPPER TO NEW BOOSTER PUMP DURAMAC MODEL 17052R020PC1 OR APPROVED EQUAL. INSTALL PER MANUFACTURES RECOMMENDATIONS, IN PRESSURE MODE.
8. RUN BOOSTER PUMP OUTLET 25mm COPPER ALONG INSIDE WALL OF STORAGE ROOM, OUT OF STORAGE ROOM AND INTO UTILITY TRENCH.
9. ONCE IN UTILITY TRENCH, COVERT COPPER TO PVC WATER LINE. RUN 25mm PVC WATERLINE IN UTILITY TRENCH TO PIER PER UTILITY TRENCH MANUFACTURERS RECOMMENDATIONS.
10. RUN NEW 25mm PVC WATERLINE INSIDE 50mm PVC CONDUIT ALONG CENTERLINE OF PIER TO BOTH EMBEDDED WATER LINE JUNCTION BOX AND MARINE POWER PEDESTALS.
11. INSTALL 25mm PVC WATERLINE 4-WAY CROSS AND SERVICES TO MARINE POWER PEDESTALS. CONNECT WATER SERVICE TO MARINE POWER PEDESTAL USING FITTINGS AND REDUCERS PER MARINE POWER PEDESTAL MANUFACTURES RECOMMENDATIONS.
12. INSTALL 25mm PVC WATERLINE TEE AND SERVICES TO MARINE POWER PEDESTALS. CONNECT WATER SERVICE TO MARINE POWER PEDESTAL USING FITTINGS AND REDUCERS PER MARINE POWER PEDESTAL MANUFACTURES RECOMMENDATIONS.

US Army Corps of Engineers®

MARK	DESCRIPTION	DATE

ISSUE DATE: NOVEMBER 2017
SOLICITATION NO.: -
CONTRACT NO.: -
PROJECT NUMBER: M017EV17
FILE NAME: H101EV17.DWG

DESIGNED BY: T. HYMAN
DRAWN BY: J. JOHNSON
CHECKED BY: C. DWYER
SUBMITTED BY: T. HYMAN
SIZE: ANSI D

US ARMY CORPS OF ENGINEERS
MOBILE DISTRICT
MOBILE, ALABAMA

BASKERVILLE-DONOVAN, INC.
Innovative Infrastructure Solutions
1201 MONTLEIMON DRIVE, SUITE 400, MOBILE, ALABAMA 36609
ENGINEERING BUSINESS ID:0000242 SURVEYING BUSINESS ID:0000241
Pensacola • Panama City Beach • Tallahassee • Mobile • Brevard County • Tampa

PONCE, PUERTO RICO
PONCE MARINE UNIT - PIER & BOAT RAMP REPLACEMENT

BOAT RAMP WATER OVERVIEW

SHEET ID
H-101

NOTES:

1. SEE SHEET C–101 FOR SURVEY CONTROL POINTS, BENCHMARKS, AND COORDINATES.
2. SEE SHEET X–003 FOR SYMBOL LEGEND AND SHEET X–004 FOR ABBREVIATION LEGEND.
3. SEE ADDITIONAL NOTES SHEET H–101.

WJB DENOTES WATER LINE JUNCTION BOX WITH CAST IRON LID (SEE DETAILS ON STRUCTURAL SHEETS AND SHEET H–501)

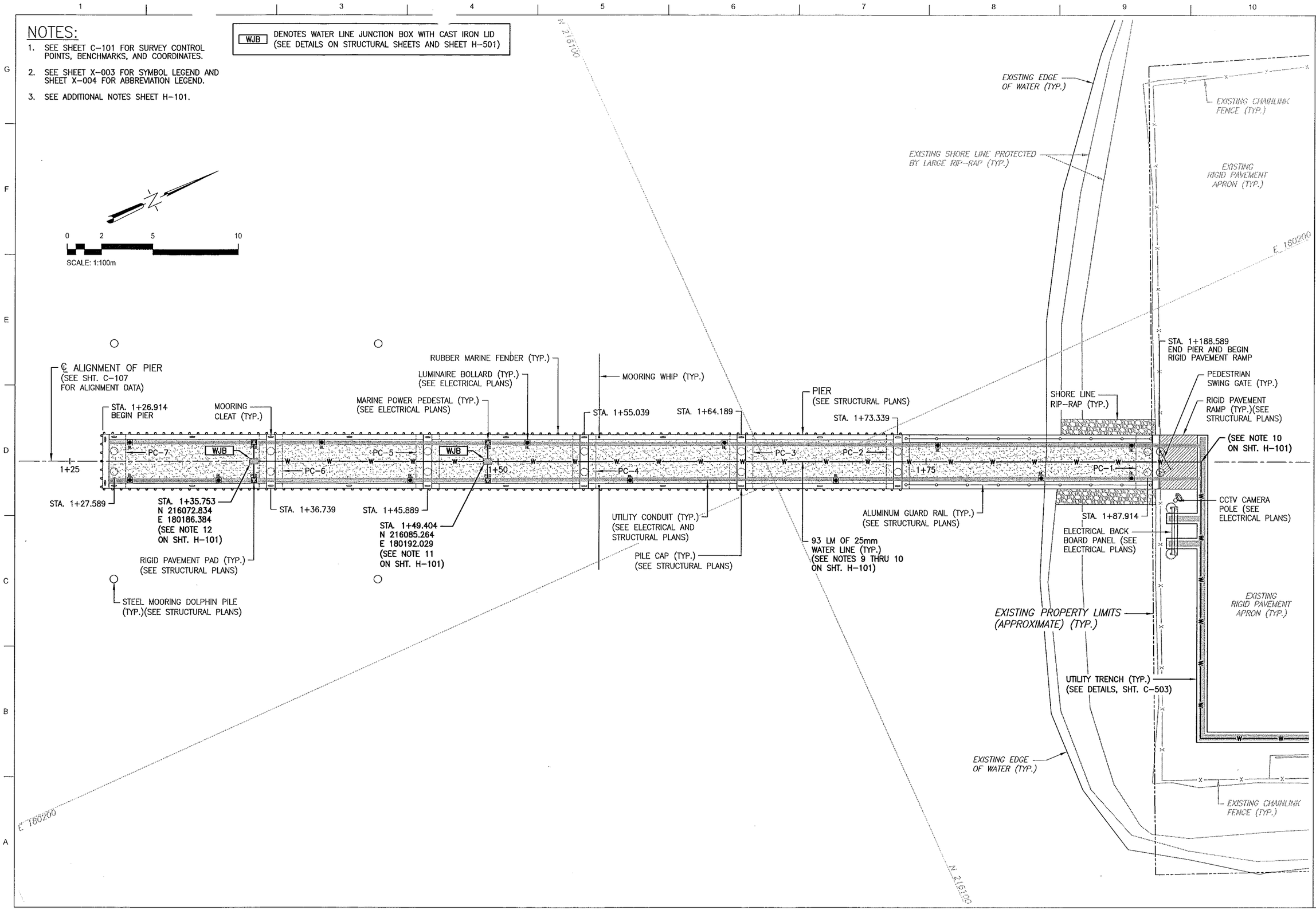

US Army Corps of Engineers®

MARK	DESCRIPTION	DATE

ISSUE DATE: NOVEMBER 2017
SOLICITATION NO.:
CONTRACT NO.:
PROJECT NUMBER: M017EV17
DESIGNED BY: T. HYMAN
DRAWN BY: J. JOHNSON
CHECKED BY:
SUBMITTED BY: T. HYMAN
FILE NAME: H102EV17.DWG
SIZE: ANSI D

US ARMY CORPS OF ENGINEERS
MOBILE DISTRICT
MOBILE, ALABAMA

BASKERVILLE-DONOVAN, INC.
Innovative Infrastructure Solutions
1201 NORTH BOULEVARD, TAMPA, FLORIDA 33607 (813) 384-8011
BUSINESS ENGINEERING BUSINESS ID: 0000242
Pensacola • Panama City Beach • Tallahassee • Miami • Brevard County • Tampa

PONCE, PUERTO RICO
PONCE MARINE UNIT - PIER & BOAT RAMP REPLACEMENT

PIER WATER OVERVIEW

SHEET ID
H-102

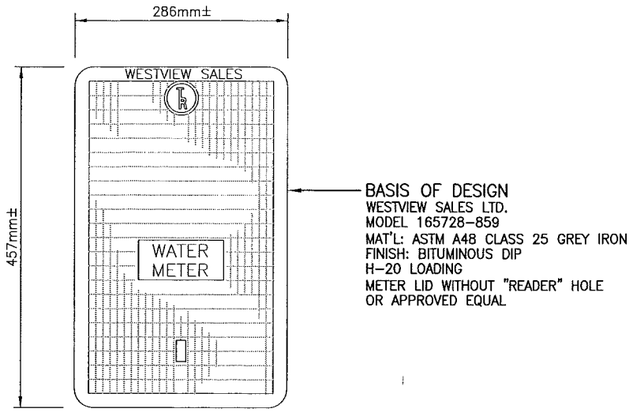

WATER LINE JUNCTION BOX LID DETAIL

N.T.S.

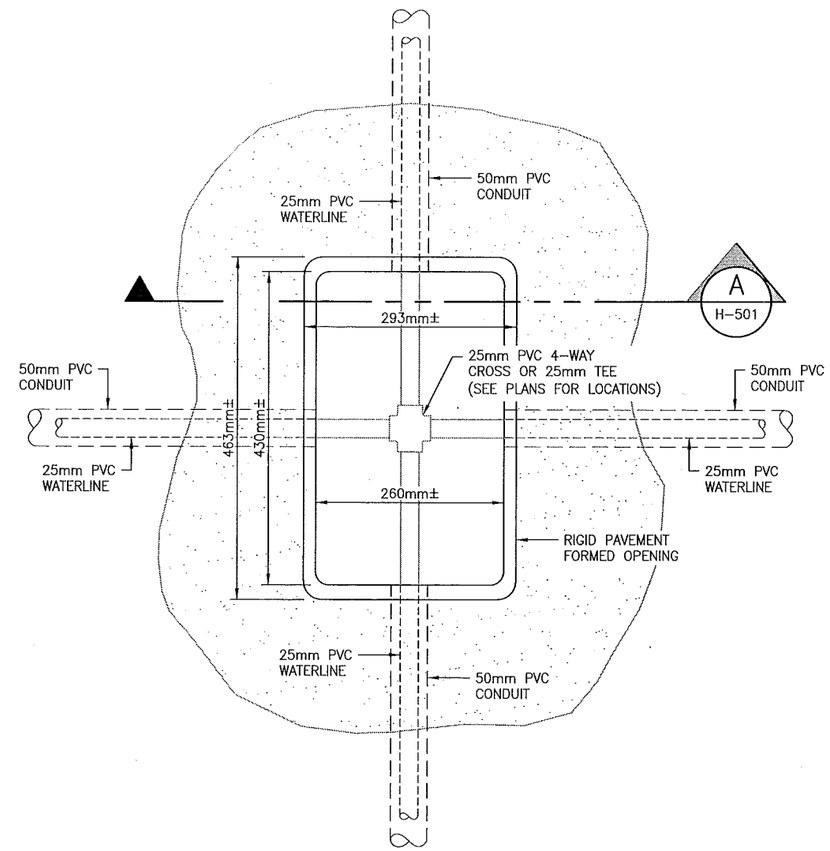

WATER LINE JUNCTION BOX DETAIL

N.T.S.

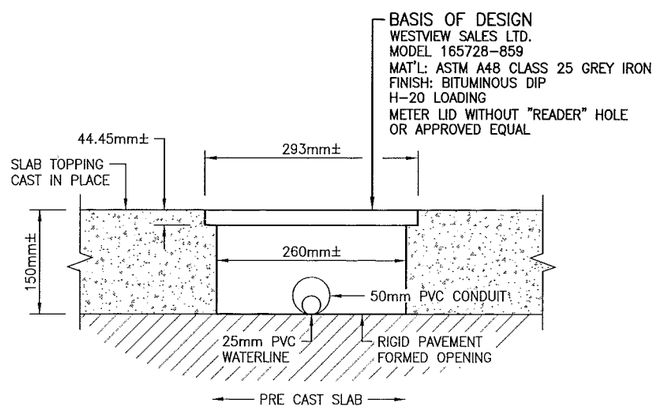

A / H-501 SECTION

N.T.S.

US Army Corps of Engineers®

MARK	DESCRIPTION	DATE

DESIGNED BY: T. HYMAN
DRAWN BY: J. JOHNSON
CHECKED BY: D. WYATT
SUBMITTED BY: T. HYMAN
SIZE: ANSI D
ISSUE DATE: NOVEMBER 2017
SOLICITATION NO.: -
CONTRACT NO.: -
PROJECT NUMBER: M017EV17
FILE NAME: H501EV17.DWG

US ARMY CORPS OF ENGINEERS
MOBILE DISTRICT
MOBILE, ALABAMA

BASKERVILLE-DONOVAN, INC.
ENGINEERS • ARCHITECTS • PLANNERS
ENGINEERING BUSINESS: EB-0000242
Pensacola • Panama City Beach • Tallahassee • Milton • Brevard County • Tampa

PONCE, PUERTO RICO
PONCE MARINE UNIT - PIER & BOAT RAMP REPLACEMENT

MISCELLANEOUS WATER DETAILS

SHEET ID

H-501

GENERAL STRUCTURAL NOTES

1.00 APPLICABLE CODES

1.01 ALL CONSTRUCTION SHALL CONFORM TO THE LATEST REVISION OF THE INTERNATIONAL BUILDING CODE (FBC 2015).

2.00 TECHNICAL SPECIFICATIONS

THESE GENERAL STRUCTURAL NOTES ARE SUMMARY IN NATURE, THE TECHNICAL SPECIFICATIONS SHALL TAKE PRECEDENCE IN THE CASE OF CONFLICT. THE FOLLOWING TECHNICAL SPECIFICATIONS SHALL GOVERN STRUCTURAL CONSTRUCTION; AND MAY BE SUPPLEMENTED BY OTHERS;

DIV. 3 03 31 29 MARINE CONCRETE

03 45 33 PRECAST PRESTRESSED CONCRETE

DIV. 31 31 62 21 HOLLOW CYLINDRICAL STEEL PIPE PILES CONCRETE FILLED

3.00 COORDINATION GENERAL NOTES

3.01 THE DESIGN, ADEQUACY, AND SAFETY OF ERECTION BRACING, TEMPORARY SUPPORTS, AND CONTROL OF ABOVE AND BELOW GROUND SURFACE WATER CONTROL, IS THE SOLE RESPONSIBILITY OF THE CONTRACTOR.

3.02 COORDINATE STRUCTURAL CONTRACT DOCUMENTS WITH ELECTRICAL, PLUMBING, COMMUNICATIONS AND CIVIL. CONTRACTOR SHALL MAKE NO DEVIATION FROM DESIGN DRAWINGS WITHOUT WRITTEN APPROVAL OF THE CONTRACTING OFFICER'S REPRESENTATIVE.

3.03 THE CONTRACTOR REMAINS SOLELY RESPONSIBLE FOR SHOP DRAWING COORDINATION.

3.04 THE CONTRACTOR IS RESPONSIBLE FOR MEANS, METHODS, TECHNIQUES, SEQUENCES, AND PROCEDURES OF CONSTRUCTION.

3.05 DO NOT PLACE PIPES OR DUCTS EXCEEDING ONE-THIRD THE SLAB OR WALL THICKNESS WITHIN STRUCTURES UNLESS SPECIFICALLY SHOWN AND DETAILED ON STRUCTURAL DRAWINGS.

4.00 FOUNDATION DESIGN CRITERIA/DATA

4.01 A GEOTECHNICAL INVESTIGATION REPORT HAS BEEN PERFORMED BY MGV GEOTECHNICAL GROUP, PSC. JOB NO. 1697, DATED JULY 17, 2017.

5.00 MINIMUM MATERIAL DESIGN STRENGTHS

5.01 CONCRETE -28 DAY COMPRESSIVE STRENGTH = 5000 psi = 35 MPa

5.02 STEEL REINFORCING -fy = 60,000 psi = 414 MPa

US Army Corps of Engineers®

MARK	DESCRIPTION	DATE

DESIGNED BY: T. HYMAN
DRAWN BY: J. JOHNSON
CHECKED BY: D. WYATT
SUBMITTED BY: T. HYMAN
SIZE: ANSI D
ISSUE DATE: NOVEMBER 2017
SOLICITATION NO.: -
CONTRACT NO.: -
PROJECT NUMBER: M017EV17
FILE NAME: XXXXEXXX.DWG

US ARMY CORPS OF ENGINEERS
MOBILE DISTRICT
MOBILE, ALABAMA

BASKERVILLE-DONOVAN, INC.
ENGINEERS • ARCHITECTS • PLANNERS
251 NORTH ILEXT PLACE, SUITE 400, MOBILE, AL 36608
ENGINEERING BUSINESS #2052
Pensacola • Panama City Beach • Tallahassee • Mobile • Destin Country • Tampa

PONCE, PUERTO RICO
PONCE MARINE UNIT - PIER & BOAT RAMP REPLACEMENT

GENERAL STRUCTURAL NOTES

SHEET ID
S-001

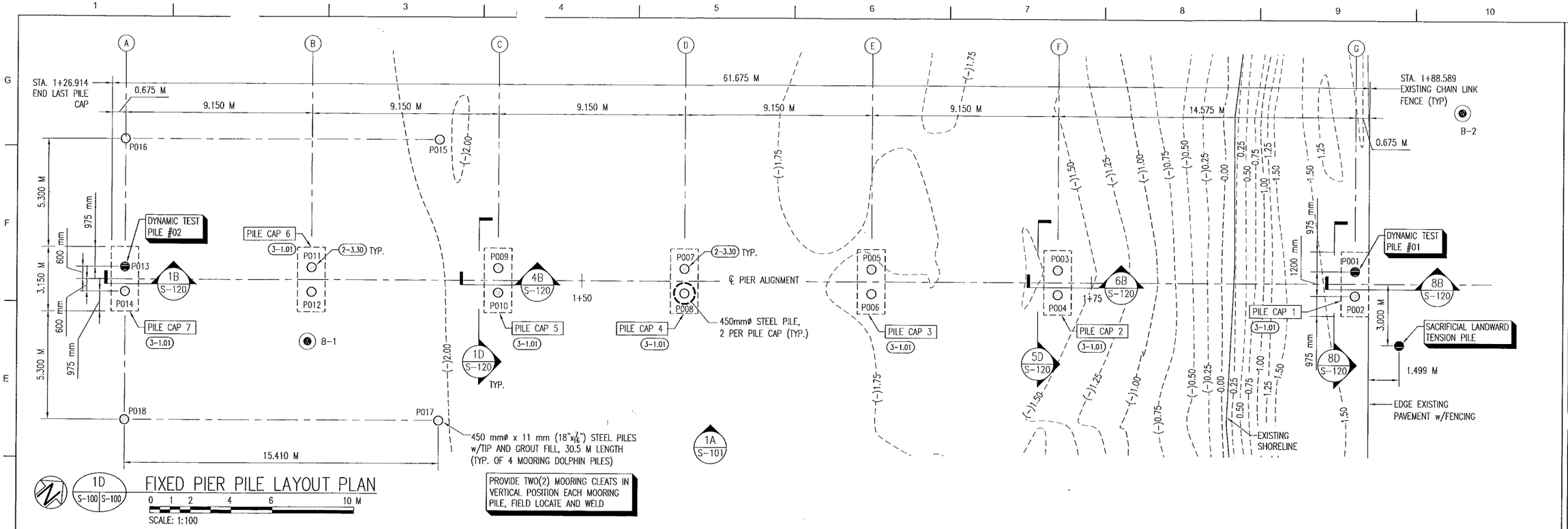

1D S-100 | S-100 FIXED PIER PILE LAYOUT PLAN

0 1 2 4 6 10 M

SCALE: 1:100

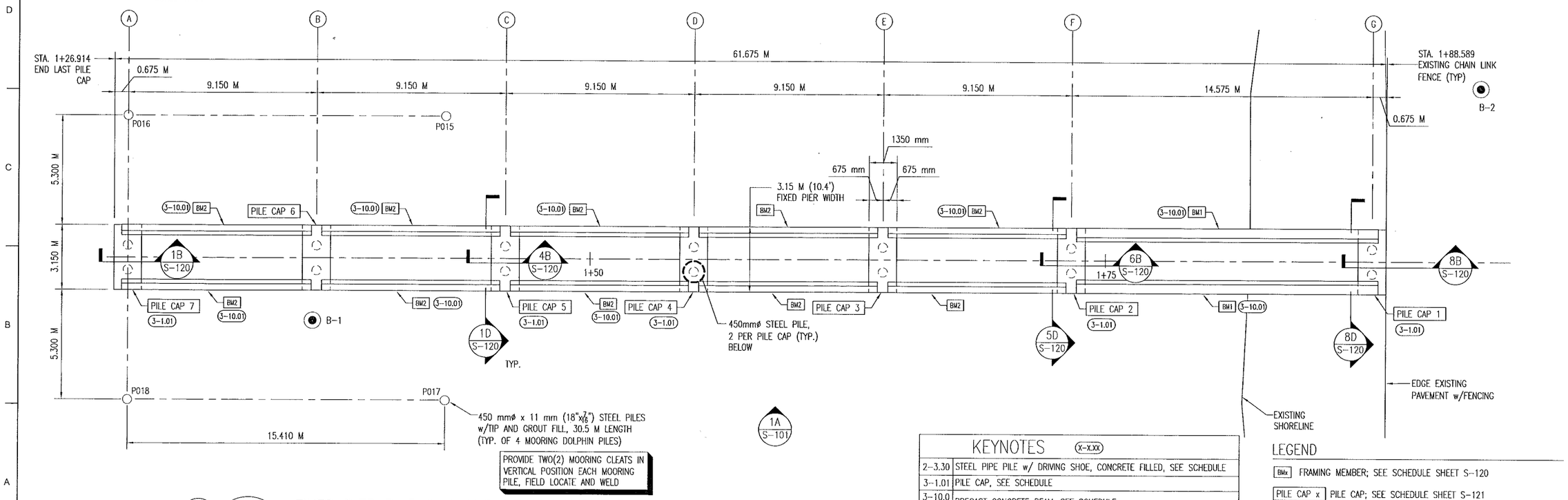

1A S-100 | S-100 FIXED PIER PILE CAP AND BEAM LAYOUT PLAN

0 1 2 4 6 10 M

SCALE: 1:100

KEYNOTES (X-X.XX)

2-3.30	STEEL PIPE PILE w/ DRIVING SHOE, CONCRETE FILLED, SEE SCHEDULE
3-1.01	PILE CAP, SEE SCHEDULE
3-10.01	PRECAST CONCRETE BEAM, SEE SCHEDULE

LEGEND

- BMx — FRAMING MEMBER; SEE SCHEDULE SHEET S-120
- PILE CAP x — PILE CAP; SEE SCHEDULE SHEET S-121
- Pxxx — PILE MARK, SEE SCHEDULE SHEET S-121
- B-x — SOIL BORING LOCATION (GEOTECHNICAL REPORT PROVIDED BY MGV GEOTECHNICAL GROUP, PSC. DATED JULY 17, 2017)

US Army Corps of Engineers®

MARK	DESCRIPTION	DATE

DESIGNED BY: T. HYMAN
DRAWN BY: J. CONNOSCIA
CHECKED BY: D. WYATT
SUBMITTED BY: T. HYMAN
SIZE: ANSI D
ISSUE DATE: NOVEMBER 2017
SOLICITATION NO.: -
CONTRACT NO.: -
PROJECT NUMBER: M017EV17
FILE NAME: S100EV17.DWG

US ARMY CORPS OF ENGINEERS
MOBILE DISTRICT
MOBILE, ALABAMA

BASKERVILLE-DONOVAN, INC.
A DIVISION OF HDR ENGINEERING, INC. OF THE CAROLINAS
1201 MONTLEALE DRIVE, SUITE 200, MOBILE, AL 36609 (251) 340-0311
Engineering Business Number: BA0002026
Pensacola - Panama City Beach - Fernandina Beach - Duval County - Tampa

PONCE, PUERTO RICO
PONCE MARINE UNIT - PIER & BOAT RAMP REPLACEMENT

FIXED PIER, PILE CAP AND BEAM LAYOUT PLANS

SHEET ID
S-100

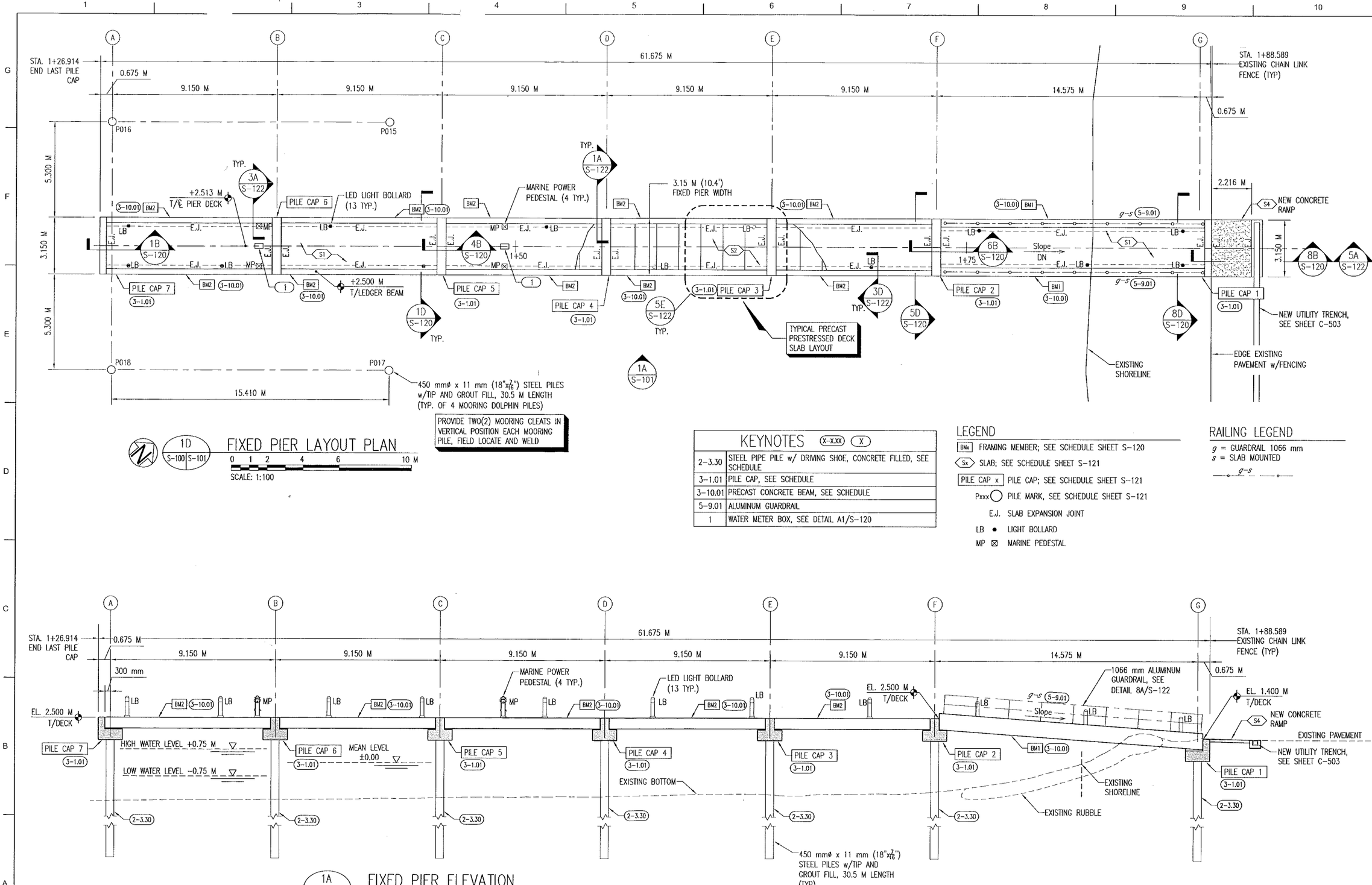

1D S-100 S-101 FIXED PIER LAYOUT PLAN

SCALE: 1:100

KEYNOTES (X-X.XX) (X)

2-3.30	STEEL PIPE PILE w/ DRIVING SHOE, CONCRETE FILLED, SEE SCHEDULE
3-1.01	PILE CAP, SEE SCHEDULE
3-10.01	PRECAST CONCRETE BEAM, SEE SCHEDULE
5-9.01	ALUMINUM GUARDRAIL
1	WATER METER BOX, SEE DETAIL A1/S-120

LEGEND

- BMx FRAMING MEMBER; SEE SCHEDULE SHEET S-120
- Sx SLAB; SEE SCHEDULE SHEET S-121
- PILE CAP x PILE CAP; SEE SCHEDULE SHEET S-121
- Pxxx PILE MARK, SEE SCHEDULE SHEET S-121
- E.J. SLAB EXPANSION JOINT
- LB LIGHT BOLLARD
- MP MARINE PEDESTAL

RAILING LEGEND

g = GUARDRAIL 1066 mm
s = SLAB MOUNTED

1A S-100 S-101 S-101 FIXED PIER ELEVATION

SCALE: 1:100

US Army Corps of Engineers®

MARK	DESCRIPTION	DATE

DESIGNED BY: T. HYMAN
DRAWN BY: J. COSSY
CHECKED BY: D. WYATT
SUBMITTED BY: T. HYMAN
SIZE: ANSI D
ISSUE DATE: NOVEMBER 2017
SOLICITATION NO.: -
CONTRACT NO.: -
PROJECT NUMBER: M07TEV17
FILE NAME: S101EV17.DWG

US ARMY CORPS OF ENGINEERS
MOBILE DISTRICT
MOBILE, ALABAMA

BASKERVILLE-DONOVAN, INC.
A MEMBER OF THE AECOM TECHNICAL SERVICES GROUP
1201 MONTLEAR DRIVE, SUITE 200, MOBILE, AL 36609 (251) 343-1111
ENGINEERING BUSINESS: 1B-00000242
Pensacola • Panama City • Dothan • Tuscaloosa • Mobile • Baldwin County • Fairhope

PONCE, PUERTO RICO
PONCE MARINE UNIT - PIER & BOAT RAMP REPLACEMENT

FIXED PIER AND PILE CAP LAYOUT AND ELEVATION

SHEET ID
S-101

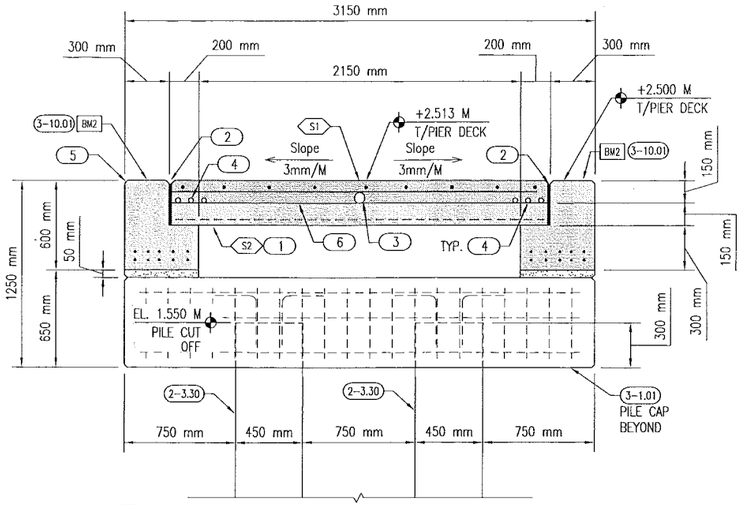

1D S-100 S-120 — SECTION – PILE CAPS 3 THRU 7

S-101

SCALE: 1:20

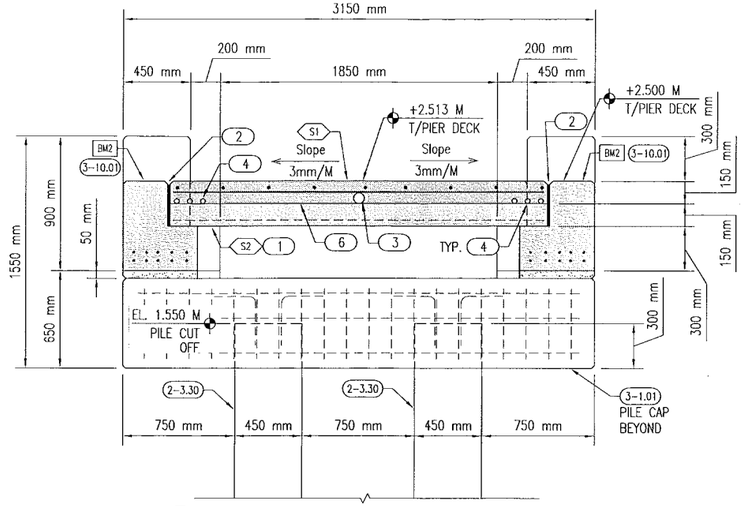

5D S-100 S-120 — SECTION – PILE CAP 2

S-101

SCALE: 1:20

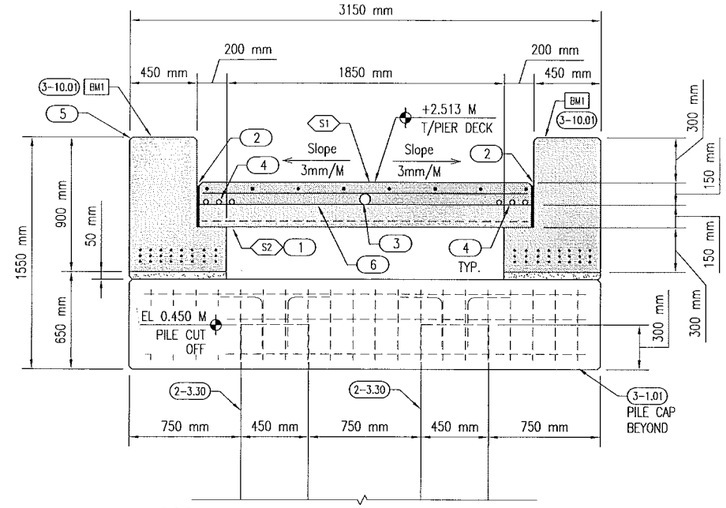

8D S-100 S-120 — SECTION – PILE CAP 1

S-101

SCALE: 1:20

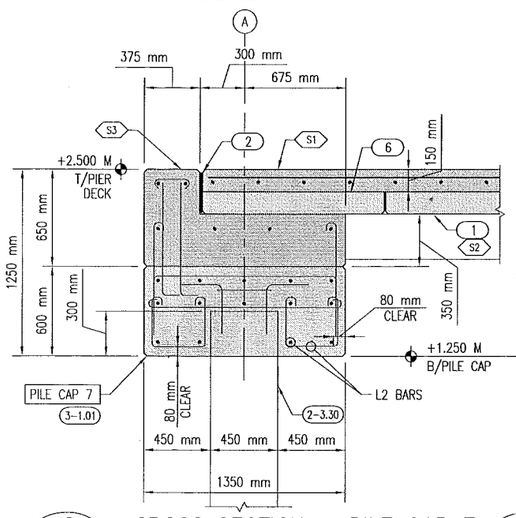

1B S-100 S-120 — CROSS SECTION – PILE CAP 7

S-101

SCALE: 1:20

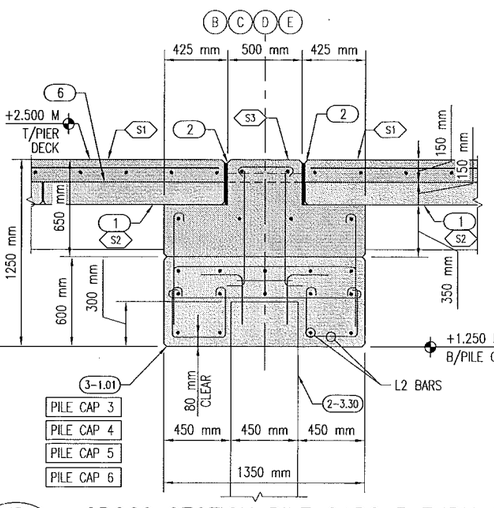

4B S-100 S-120 — CROSS SECTION PILE CAPS 3 THRU 6

S-101

SCALE: 1:20

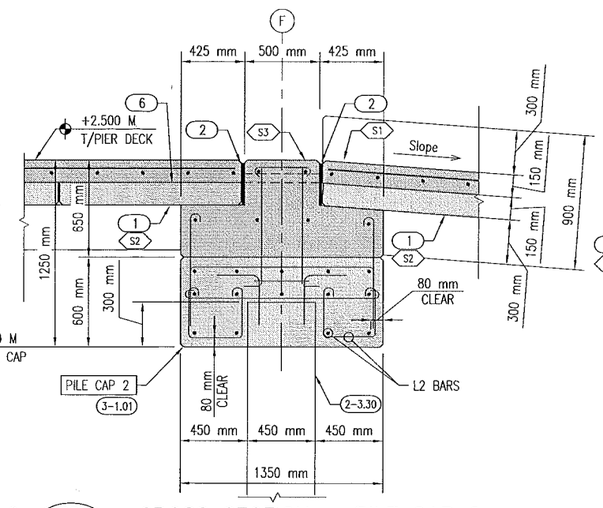

6B S-100 S-120 — CROSS SECTION – PILE CAP 2

S-101

SCALE: 1:20

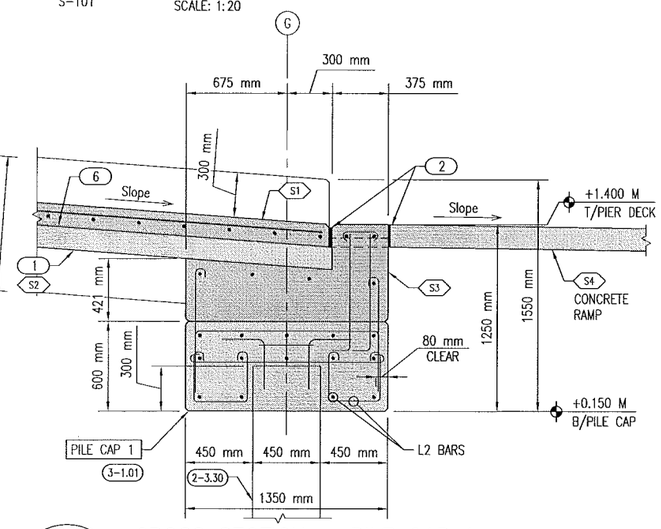

8B S-100 S-120 — CROSS SECTION – PILE CAP 1

S-101

SCALE: 1:20

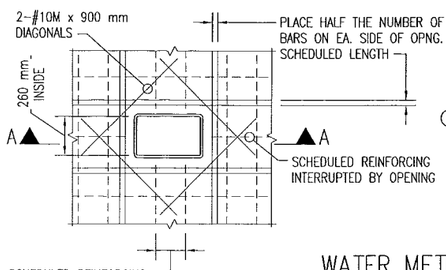

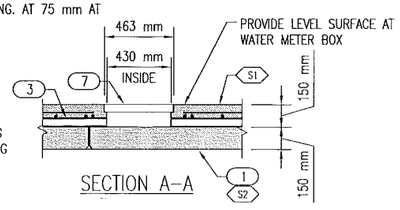

1A S-101 S-120 — WATER METER BOX SLAB OPENING DETAIL

SCALE: 1:20

PRECAST BEAM SCHEDULE

MARK	DESIGNATION	DESCRIPTION	COMMENTS
BM1	26LB36	PRECAST L-BEAM	NOMINAL SIZE SHOWN. FINAL SIZE BY DELEGATED ENGINEER
BM2	20LB24	PRECAST L-BEAM	NOMINAL SIZE SHOWN. FINAL SIZE BY DELEGATED ENGINEER

LEGEND

- Sx — SLAB; SEE SCHEDULE SHEET S-121
- BMx — FRAMING MEMBER; SEE SCHEDULE SHEET S-120
- PILE CAP x — PILE CAP; SEE SCHEDULE SHEET S-121

KEYNOTES (X-X.XX) (X)

MARK	DESCRIPTION
2-3.30	STEEL PIPE PILE w/ DRIVING SHOE, CONCRETE FILLED, SEE SCHEDULE
3-1.01	PILE CAP, SEE SCHEDULE
3-10.01	PRECAST CONCRETE BEAM, SEE SCHEDULE
1	150 mm PRECAST SOLID FLAT SLAB
2	15 mm PRE-FORMED EXPANSION JOINT MATERIAL – RECESS 30 mm + PLACE JOINT SEALANT
3	2" PVC CONDUIT SLEEVE WITH FITTINGS & STAINLESS STEEL ROUTING CLAMPS FOR WATER LINE
4	1" PVC ELECTRICAL CONDUIT SLEEVE WITH FITTING & STAINLESS STEEL ROUTING CLAMPS
5	20 mm CHAMFER ALL CONCRETE EXPOSED EDGES.
6	CONCRETE BONDING ADHESIVE
7	CAST IRON LID SEE SHEET H-501 FOR DETAILS

US Army Corps of Engineers®

MARK	DESCRIPTION	DATE

ISSUE DATE: NOVEMBER 2017
SOLICITATION NO.:
CONTRACT NO.:
PROJECT NUMBER: M017EV17
FILE NAME: M017EV17.DWG

DESIGNED BY: T. HYMAN
DRAWN BY: J. JOHNSON
CHECKED BY: D. CLARK
SUBMITTED BY: T. HYMAN
SIZE: ANSI D
FILE NAME: S120EV17.DWG

US ARMY CORPS OF ENGINEERS
MOBILE DISTRICT
MOBILE, ALABAMA

BASKERVILLE-DONOVAN, INC.
Innovative Infrastructure Solutions
2201 NORTHWEST CORPORATE BLVD., SUITE 100, BOCA RATON, FL 33431-7328
ENGINEERING BUSINESS #6-00243
Pensacola / Panama City Beach / Tallahassee / Mobile / Brevard County / Tampa

PONCE, PUERTO RICO
PONCE MARINE UNIT - PIER & BOAT RAMP REPLACEMENT

FIXED PIER SECTIONS

SHEET ID

S-120

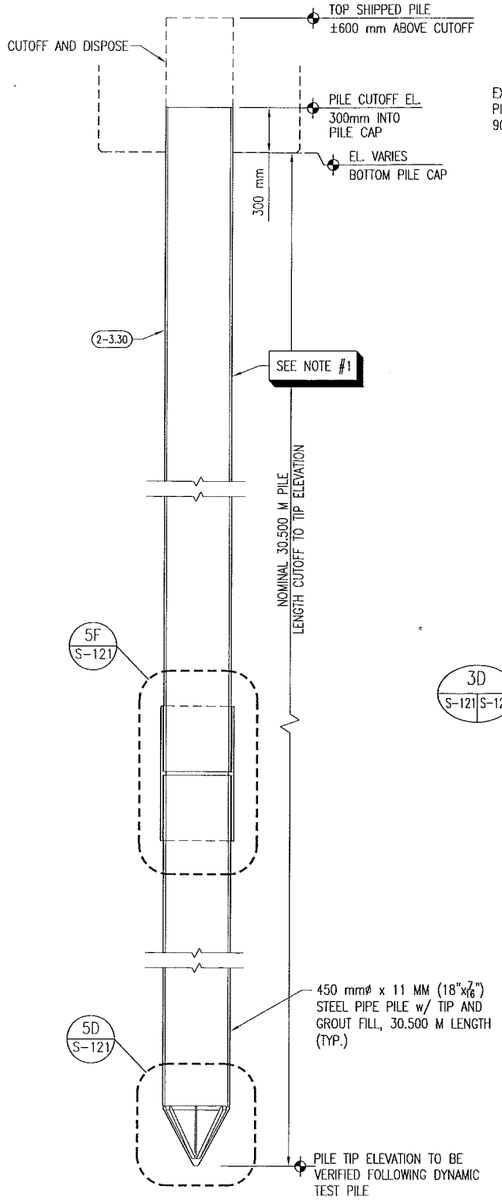

1A S-121 S-121 TYP. STEEL PIPE PILE SECTION

0 .20 .40 .80 1.2 2M

SCALE: 1:20

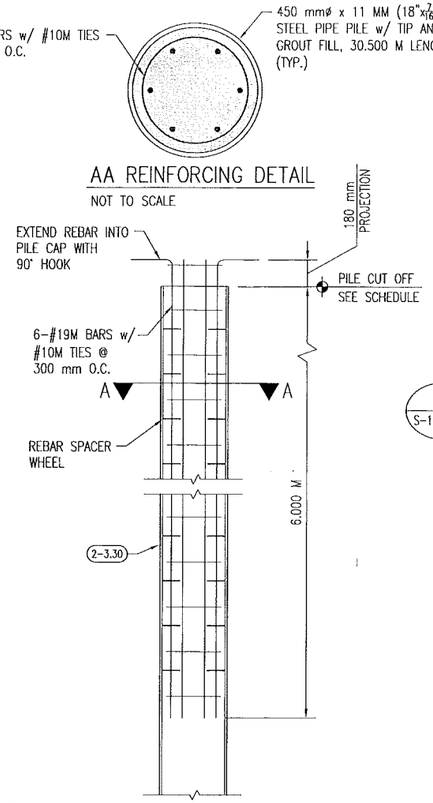

3D S-121 S-121 TYP. PILE REINFORCING DETAIL

0 .20 .40 .80 1.2 2M

SCALE: 1:20

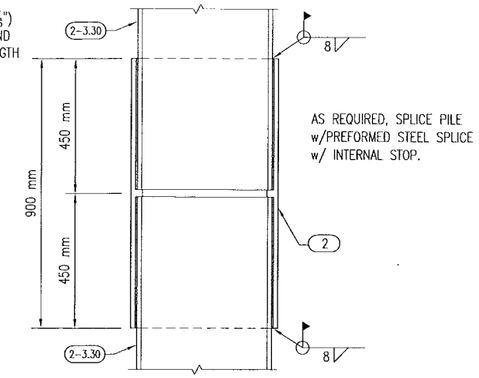

5F S-121 S-121 STEEL PIPE PILE SPLICING DETAIL

0 .10 .20 .40 .60 1M

SCALE: 1:10

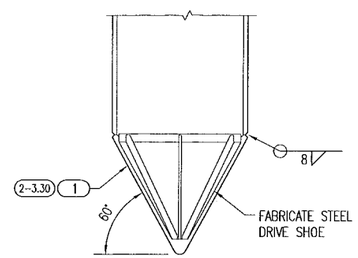

5D S-121 S-121 STEEL PIPE PILE CONICAL DRIVING SHOE DETAIL

0 .10 .20 .40 .60 1M

SCALE: 1:10

GENERAL NOTES

1. STEEL PIPE PILES SHIPPED w/(3) COATS COAL TAR EPOXY PROTECTIVE COATING.
   - PILE STORAGE AND HANDLING TO PREVENT COATING DAMAGE.
   - MINIMUM 3 COATS TOUCH UP FOLLOWING FIELD WELDMENT.

KEYNOTES (X-X.XX) (X)

MARK	DESCRIPTION
2-3.30	STEEL PIPE PILE w/ DRIVING SHOE, CONCRETE FILLED, SEE SCHEDULE
1	STEEL DRIVE SHOE
2	STEEL PIPE PILE SPLICER

SLAB REINFORCING SCHEDULE

DESCRIPTION	MARK	THICKNESS	REINFORCING	COMMENTS
SLAB TOPPING (CAST-IN-PLACE)	S1	150 mm	#10M @ 200 mm O.C.E., TOP	80 mm TOP COVER, MEDIUM BROOM FINISH
SOLID FLAT SLAB (PRECAST)	S2	150 mm	PER MANUFACTURER	SIZE NOMINAL, FINAL SIZE BY DELEGATED ENGINEER
SECONDARY POUR (CAST-IN-PLACE)	S3	300 mm	6-#10M CONT. w/ #10M STIRRUPS @ 300 mm O.C.	
CONCRETE RAMP (CAST-IN-PLACE)	S4	150 mm	#16M @ 150 mm O.C.E.W, CENTERED	MEDIUM BROOM FINISH

PILE CAP SCHEDULE

MARK	SIZE	REINFORCING	L2 BARS
PILE CAP 1	1350 mm WIDE x 600 mm DEEP	5-#16M BARS T&B CONT. w/ #16M BARS T&B TRANSVERSE 180° HOOK BOT., 90° HOOK TOP	2-#16M BARS, CONT. BOT. w/ #16M 2-LEG STIRRUPS @ 300 mm O.C.
PILE CAP 2	1350 mm WIDE x 600 mm DEEP	5-#16M BARS T&B CONT. w/ #16M BARS T&B TRANSVERSE 180° HOOK BOT., 90° HOOK TOP	2-#16M BARS, CONT. BOT. w/ #16M 2-LEG STIRRUPS @ 300 mm O.C.
PILE CAP 3	1350 mm WIDE x 600 mm DEEP	5-#16M BARS T&B CONT. w/ #16M BARS T&B TRANSVERSE 180° HOOK BOT., 90° HOOK TOP	2-#16M BARS, CONT. BOT. w/ #16M 2-LEG STIRRUPS @ 300 mm O.C.
PILE CAP 4	1350 mm WIDE x 600 mm DEEP	5-#16M BARS T&B CONT. w/ #16M BARS T&B TRANSVERSE 180° HOOK BOT., 90° HOOK TOP	2-#16M BARS, CONT. BOT. w/ #16M 2-LEG STIRRUPS @ 300 mm O.C.
PILE CAP 5	1350 mm WIDE x 600 mm DEEP	5-#16M BARS T&B CONT. w/ #16M BARS T&B TRANSVERSE 180° HOOK BOT., 90° HOOK TOP	2-#16M BARS, CONT. BOT. w/ #16M 2-LEG STIRRUPS @ 300 mm O.C.
PILE CAP 6	1350 mm WIDE x 600 mm DEEP	5-#16M BARS T&B CONT. w/ #16M BARS T&B TRANSVERSE 180° HOOK BOT., 90° HOOK TOP	2-#16M BARS, CONT. BOT. w/ #16M 2-LEG STIRRUPS @ 300 mm O.C.
PILE CAP 7	1350 mm WIDE x 600 mm DEEP	5-#16M BARS T&B CONT. w/ #16M BARS T&B TRANSVERSE 180° HOOK BOT., 90° HOOK TOP	2-#16M BARS, CONT. BOT. w/ #16M 2-LEG STIRRUPS @ 300 mm O.C.

STEEL PIPE PILE SCHEDULE

LOCATION	MARK	U/S PILE CAP OR PIER EL.	PILE TOP EL. (CUT-OFF)	TIP EL.	DESIGN AXIAL COMPRESSIVE LOADS (TONS)	DESIGN AXIAL LATERAL LOADS (TONS)
PILE CAP 1	P001-P002	+0.150 M	+0.450 M	-30.350 M	27.6 T	1.0 T
PILE CAP 2	P003-P004	+1.250 M	+1.550 M	-29.250 M	37.3 T	1.0 T
PILE CAP 3	P005-P006	+1.250 M	+1.550 M	-29.250 M	27.3 T	1.0 T
PILE CAP 4	P007-P008	+1.250 M	+1.550 M	-29.250 M	27.3 T	1.0 T
PILE CAP 5	P009-P010	+1.250 M	+1.550 M	-29.250 M	27.3 T	1.0 T
PILE CAP 6	P011-P012	+1.250 M	+1.550 M	-29.250 M	27.3 T	1.0 T
PILE CAP 7	P013-P014	+1.250 M	+1.550 M	-29.250 M	27.3 T	1.0 T
MOORING DOLPHIN PILES	P015-P018	--	+3.500 M	-27.000 M	17.6 T	1.0 T
TENSION PILE	--	--	+3.400 M	-37.100 M	--	1.0 T

NOTES:

1) PROVIDE TWO (2) DYNAMIC TEST PILES AND ONE (1) TENSION PILE INDICATED PER PLAN.
2) FABRICATE, SHIP AND DRIVE A PILE LENGTH 600 mm HIGHER THAN TOP OR CUT-OFF ELEVATION. TRIM IN THE FIELD.
3) PILE COMPRESSIVE CAPACITY LISTED COMPUTED AT NOMINAL BEARING RESISTANCE PER GEOTECH LESS TENSION PILE / SAFETY FACTOR OF 2.00
4) DESIGN AXIAL SERVICE LOADS INCLUDE ALL PILES, PILE CAPS AND PIER WEIGHTS. UNFACTORED LOADS AND LIVE LOADS.
5) ALL PILES SHALL BE FILLED WITH CONCRETE

US Army Corps of Engineers®

MARK	DESCRIPTION	DATE

DESIGNED BY: T. HYMAN
DRAWN BY: J. JACKSON
CHECKED BY: D. WYATT
SUBMITTED BY: T. HYMAN
SIZE: ANSI D
ISSUE DATE: NOVEMBER 2017
SOLICITATION NO.: -
CONTRACT NO.: -
PROJECT NUMBER: M017EV17
FILE NAME: S121EV17.DWG

US ARMY CORPS OF ENGINEERS
MOBILE DISTRICT
MOBILE, ALABAMA

BASKERVILLE-DONOVAN, INC.
INNOVATIVE SOLUTIONS • ENGINEERS • ARCHITECTS • PLANNERS
1201 LIVE OAK BLVD., SUITE B, MOBILE, AL 36609 (251) 340-0011
ENGINEERING BUSINESS CERTIFICATE: C-2400-049
Pensacola • Panama City Beach • Fairhope • Mobile • Brewton/Crossville • Tampa

PONCE, PUERTO RICO
PONCE MARINE UNIT - PIER & BOAT RAMP REPLACEMENT

STEEL PIPE PILE DETAILS AND SCHEDULES

SHEET ID
S-121

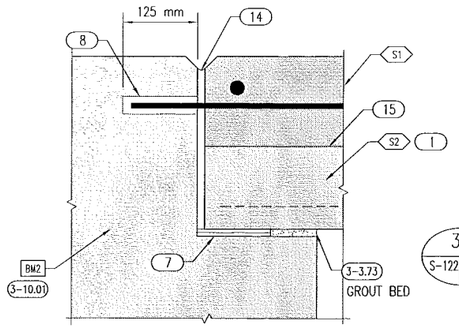

1F S-122 S-122 BEAM/SLAB TOPPING CONNECTION DETAIL

0 .05 .10 .20 .30 .5M

SCALE: 1:5

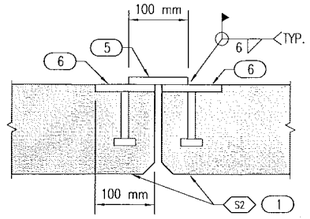

3F S-122 S-122 SLAB CONNECTION DETAIL

0 .05 .10 .20 .30 .5M

SCALE: 1:5

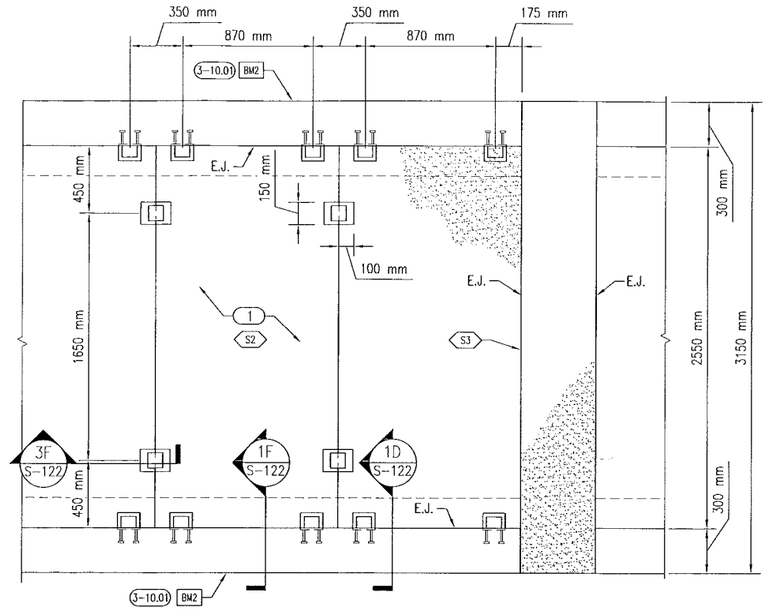

5E S-101 S-122 TYP. CONCRETE DECK CONNECTION PLAN

0 .20 .40 .80 1.2 2M

SCALE: 1:20

KEYNOTES (X-XXX) (X)	
MARK	DESCRIPTION
2-3.30	STEEL PIPE PILE w/ DRIVING SHOE, CONCRETE FILLED, SEE SCHEDULE
3-1.01	PILE CAP, SEE SCHEDULE
3-3.73	CONCRETE GROUT w/BONDING ADHESIVE (3000 psi)
3-10.01	PRECAST CONCRETE BEAM, SEE SCHEDULE
1	150 mm PRECAST SOLID FLAT SLAB
2	50 mm BUILD UP TFE (TEFLON) BEARING PAD
3	300 mm x 300 mm x 16 mm THICK 316 STAINLESS STEEL PLATE W/ 2-16 mm HEADED STUDS
4	25.4mmø THREADED ROD w/ NUT & WASHER TOP & BOT.
5	100 mm x 100 mm x 16 mm THICK 316 STAINLESS STEEL FLAT BAR
6	100 mm x 150 mm x 16 mm THICK 316 STAINLESS STEEL PLATE WITH 2-16 mmø x 100 mm HEADED STUDS
7	BUILD UP TFE (TEFLON) BEARING PAD
8	EPOXY EMBED REINFORCING 125 mm INTO PRECAST BEAM AT 600 mm O.C.
9	100 mm x 305 mm x 305 mm HOUSEKEEPING PAD w/ 3-#10M HAIRPINS. FINAL SIZE TO ACCOMMODATE BASE PLATE AND 20 mm CHAMFER
10	20 mm CHAMFER ALL CONCRETE EXPOSED EDGES.
11	PVC PIPE SLEEVE AT SECONDARY POUR FOR ELECTRICAL CONDUIT
12	FASTEN CONDUIT TO PRECAST SLABS w/ STAINLESS STEEL CONDUIT ROUTING CLAMPS
13	100 mm x 75 mm x 16 mm THICK 316 STAINLESS STEEL FLAT BAR
14	15 mm PRE-FORMED EXPANSION JOINT MATERIAL - RECESS 30 mm + PLACE JOINT SEALANT
15	CONCRETE BONDING ADHESIVE
16	1" PVC ELECTRICAL CONDUIT SLEEVE WITH FITTING & STAINLESS STEEL ROUTING CLAMPS

LEGEND

(Sx) SLAB; SEE SCHEDULE SHEET S-121

BMx FRAMING MEMBER; SEE SCHEDULE SHEET S-120

PILE CAP x PILE CAP; SEE SCHEDULE SHEET S-121

E.J. SLAB EXPANSION JOINT

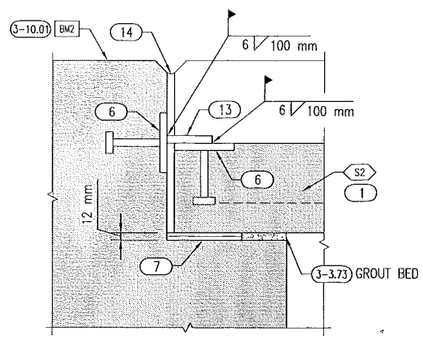

1D S-122 S-122 SLAB/BEAM CONNECTION DETAIL

0 .05 .10 .20 .30 .5M

SCALE: 1:5

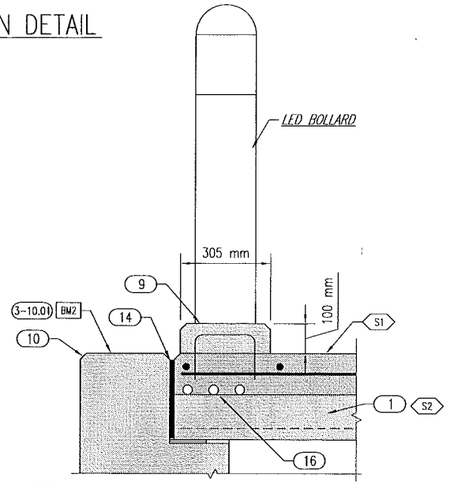

3D S-101 S-122 TYP. LED BOLLARD MOUNTING DETAIL

0 .10 .20 .40 .60 1M

SCALE: 1:10

RAILING LEGEND

g = GUARDRAIL 1066 mm

s = SLAB MOUNTED

g-s

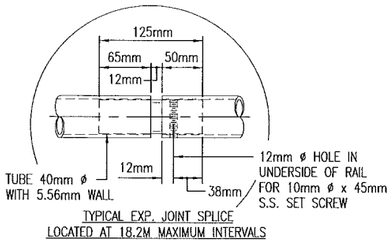

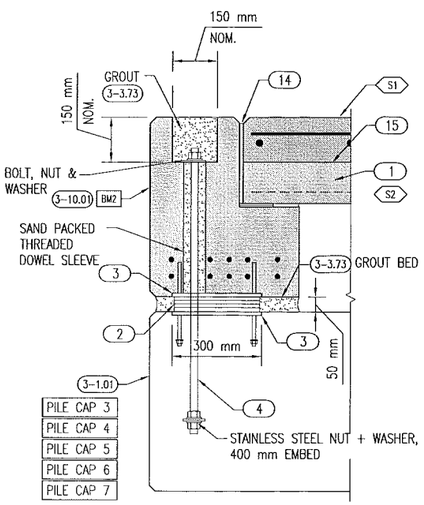

1A S-101 S-122 BEAM/PILE CAP CONNECTION DETAIL

0 .10 .20 .40 .60 1M

SCALE: 1:10

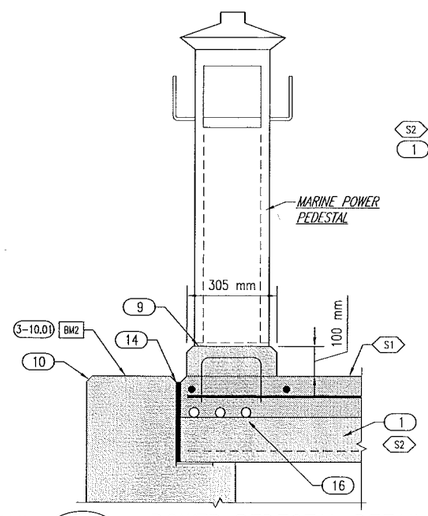

3A S-101 S-122 POWER PEDESTAL DETAIL

0 .10 .20 .40 .60 1M

SCALE: 1:10

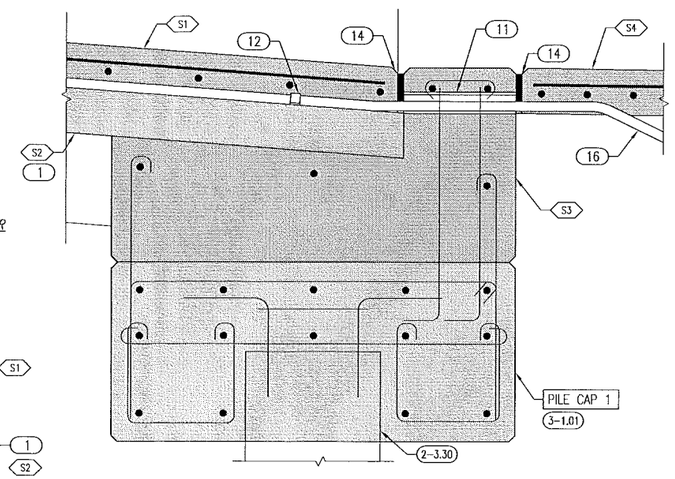

5A S-101 S-122 UTILITY PILE CAP INTERFACE DETAIL

0 .10 .20 .40 .60 1M

SCALE: 1:10

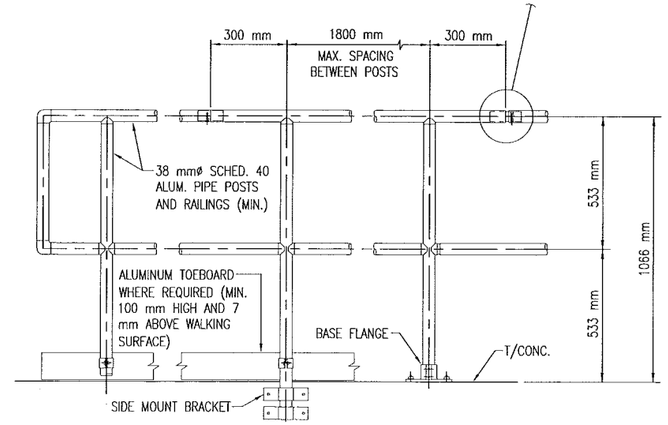

8A S-101 S-122 TYP. GUARDRAIL DETAIL

SCALE: N.T.S.

US Army Corps of Engineers®

MARK	DESCRIPTION	DATE

ISSUE DATE: NOVEMBER 2017
SOLICITATION NO.:
CONTRACT NO.:
PROJECT NUMBER: M917EV17
FILE NAME: S122EV17.DWG

DESIGNED BY: T. HYMAN
DRAWN BY: J. JOHNSON
CHECKED BY: D. WYATT
SUBMITTED BY: T. HYMAN
SIZE: ANSI D

US ARMY CORPS OF ENGINEERS
MOBILE DISTRICT
MOBILE, ALABAMA

BASKERVILLE-DONOVAN, INC.
ENGINEERS • PLANNERS • ENVIRONMENTAL SCIENTISTS
2301 MOBILE HIGHWAY, SUITE 300, MOBILE, ALABAMA 36615 (251) 476-1311
ENGINEERING BUSINESS ID-00024
Pensacola • Panama City Beach • Baldwin • Mobile • Brunswick • Tampa

PONCE, PUERTO RICO
PONCE MARINE UNIT - PIER & BOAT RAMP REPLACEMENT

FIXED PIER DETAILS

SHEET ID

S-122

GENERAL ELECTRICAL NOTES

1. THE GENERAL SCOPE OF WORK IS TO FURNISH AND INSTALL THE ELECTRICAL SYSTEMS, COMPONENTS AND MATERIALS COMPLETE IN ACCORDANCE WITH PLANS, SPECIFICATIONS AND MANUFACTURER'S PUBLISHED DATA. COORDINATE AND SUPPLY ALL SERVICE RELATED REQUIREMENTS AS FOLLOWS:
   SECONDARY SERVICE SYSTEM (LOW VOLTAGE)
   120/240 VOLT, 1 PHASE, 3 WIRE.
2. INSTALLATION AS A MINIMUM SHALL COMPLY WITH THE REQUIREMENTS OF THE NATIONAL ELECTRICAL CODE (NEC) AND THE NATIONAL ELECTRICAL SAFETY CODE (NESC). MATERIALS AND INSTALLATION SHALL BE MARINE GRADE. IT IS THE CONTRACTOR'S RESPONSIBILITY TO PERFORM ALL WORK IN AN "ELECTRICAL SAFE WORKING CONDITION" AS DEFINED BY NFPA 70E. THE CONTRACTOR SHALL UTILIZE "QUALIFIED PER" AS DEFINED IN NFPA 70 (NEC).
3. ALL CLEARANCES SHALL BE MAINTAINED PER NEC, NESC AND UL. ALL PARTS, DEVICES, EQUIPMENT, ETC. WHICH REQUIRE MAINTENANCE, ADJUSTMENT, OPERATION OR EXAMINATION DURING NORMAL NETWORK OPERATION SHALL BE ARRANGED SO AS TO BE ACCESSIBLE BY THE PROVISION OF ADEQUATE WORKING SPACES, WORKING FACILITIES AND CLEARANCES. UNLESS NOTED OTHERWISE ALL CLEARANCES ARE MEASURED FROM SURFACE TO SURFACE.
   * SEE CLEARANCE DETAILS
4. ALL DIMENSIONS INDICATED IN THESE DOCUMENTS ARE FOR REFERENCE AND COORDINATION PURPOSES ONLY. THE CONTRACTOR IS RESPONSIBLE FOR VERIFYING ALL DIMENSIONS IN THE FIELD. GENERALLY DIMENSIONS ARE SHOWN IN THE METRIC STANDARD AND ENGLISH EQUIVALENT WHEN APPLICABLE. VARIOUS CONVERSIONS ARE ROUNDED OFF, HOWEVER STANDARD MANUFACTURING AND INDUSTRY PRACTICES SHALL BE UTILIZED.
   EXAMPLE:
   CONVERSION: 1'-0" = 0.3048m
   STANDARD NOTATION: 305mm (ROUNDED) = 1'-0"
   SI UNITS OF LENGTH ARE GENERALLY GIVEN AS FOLLOWS:
   m = meter
   km = kilometer (10^3 m)
   hm = hectometer (10^2 m)
   dm = decimeter (10^{-1} m)
   cm = centimeter (10^{-2} m)
   mm = millimeter (10^{-3} m)
   ENGLISH UNITS OR LENGTHS ARE GENERALLY GIVEN AS FOLLOWS: _'-_" (FT-INCHES) WHEN SI AND ENGLISH UNITS ARE REFERENCED IN A NOTE, THE SI VERSION SHALL BE SHOWN FIRST WITH ENGLISH FOLLOWING IN PARENTHESIS.
   EXAMPLE:
   305mm (1')
   9m (30')
   COORDINATE WITH DIMENSION BLOCKS SHOWN ON DRAWINGS. ALL TRADE SIZE CONDUITS ARE NEMA AND INDUSTRY STANDARD IN ACCORDANCE WITH THEIR ROUNDED NOMINAL METRIC DESIGNATOR DIAMETER EQUIVALENT TO THE ENGLISH STANDARD AS INDICATED IN THE CONDUIT SCHEDULE.
5. PRIOR TO ANY ROUGH-IN THE CONTRACTOR SHALL SUBMIT SCALED DRAWINGS FOR APPROVAL FOR MAJOR ELECTRICAL EQUIPMENT INSTALLATIONS INDICATING ALL PROPER CLEARANCES PER THE NEC AND FOR MAINTENANCE. DRAWINGS SHALL INCLUDE MECHANICAL, PLUMBING AND STRUCTURAL DEVICES WITHIN THE SPACE OR AREA. DO NOT INSTALL ANY ELECTRICAL EQUIPMENT OR DEVICES UNTIL PROPER CLEARANCES ARE ESTABLISHED. PROVIDE FLOOR PLANS AND ELEVATION VIEWS FOR THE FOLLOWING:
   * PANEL BOARDS
   * TRANSFORMERS
   * DISCONNECT SWITCHES
   * BACKBOARDS
6. COMPLETE CONTRACT DRAWINGS AND DETAILS SHALL BE EXAMINED FOR LOCATING ALL EQUIPMENT. COMPLETE SHOP DRAWING DATA (ALL TRADES) SHALL BE EXAMINED FOR EXACT DIMENSIONAL DATA. THE CONTRACTOR SHALL COORDINATE WITH OTHER TRADES FOR THE ACTUAL EQUIPMENT TO BE INSTALLED AND SHALL SECURE DIMENSIONAL DATA THAT WILL ASSIST IN DETERMINING ADEQUATE SPACE REQUIREMENTS FOR INSTALLING ALL ELECTRICAL EQUIPMENT, LUMINAIRES, DEVICES, ROUGH-IN REQUIREMENTS, ETC. ADJUST ACTUAL LOCATION OF ELECTRICAL PROVISIONS ACCORDINGLY. ADVISE ALL TRADES CONCERNING INSTALLATION OF PIPING, DUCTS, DEVICES, ETC., ABOVE ELECTRICAL EQUIPMENT AND TO MAINTAIN ADEQUATE CLEARANCES IN ACCORDANCE WITH THE NEC AND THE REQUIREMENTS OF THIS CONTRACT. NAMEPLATE DATA OR MANUFACTURER'S WRITTEN DATA OF ACTUAL EQUIPMENT INSTALLED SHALL BE USED TO DETERMINE EXACT UNIT OR DEVICE PROTECTION, CONDUCTOR TERMINATION REQUIREMENTS, ETC. ALL DEVICES SHALL BE COORDINATED FOR THE PROPER VOLTAGE, OPERATION, CONTACT RATINGS, COLOR CODING, ETC.
7. ALL OUTLETS AND DEVICES TO SUPPLY EQUIPMENT ITEMS SHALL BE COORDINATED WITH THE SPECIFIC EQUIPMENT REQUIREMENTS AND INSTALLED ACCORDING TO MANUFACTURER'S RECOMMENDATIONS. REVIEW ALL SHOP DRAWINGS PRIOR TO ROUGH-IN.
8. ARRANGE FOR CHASES, SLOTS AND OPENINGS IN PIER AND OTHER BUILDING COMPONENTS DURING PROGRESS OF CONSTRUCTION, TO ALLOW FOR ELECTRICAL INSTALLATIONS. COORDINATE THE INSTALLATION OF REQUIRED SUPPORTING DEVICES AND SLEEVES TO BE SET IN POURED-IN-PLACE CONCRETE AND OTHER STRUCTURAL COMPONENTS, AS THEY ARE CONSTRUCTED.
9. CONDUIT SYSTEMS IN GENERAL SHALL BE CONCEALED UNLESS INDICATED OTHERWISE.
   * ALL UNDERGROUND CONDUIT RUNS ENTERING THE BUILDING SHALL BE SEALED TO PREVENT THE ENTRANCE OF MOISTURE AND GASES
   * FLEX CONDUIT INSTALLED ON EXTERIOR, IN WET LOCATIONS OR ANY MECHANICAL ROOM SHALL BE LIQUID TIGHT WITH SUITABLE FITTINGS.
   * INSTALL CONDUIT EXPANSION FITTINGS FOR CONDUITS PASSING THROUGH EXPANSION JOINTS. SEE STRUCTURAL DRAWINGS FOR LOCATIONS.
   * ALL EMPTY CONDUITS SHALL BE PROVIDED WITH PULLWIRE
   * MINIMUM SIZE CONDUIT SHALL BE 16mm UNLESS NOTED OTHERWISE
   * SEE CONDUIT & TUBING SCHEDULE
10. CONDUCTOR SYSTEMS IN GENERAL SHALL BE INSTALLED WITHIN AN APPROVED RACEWAY SYSTEM.
    * CONDUCTORS SHALL BE COPPER
    * BRANCH CIRCUIT CONDUCTORS SHALL NOT BE SMALLER THAN #12 AWG
    * CONDUCTORS NO. 8 & LARGER SHALL BE STRANDED
    * CONDUCTORS NO. 10 & SMALLER SHALL BE SOLID
    * INSTALL AN INSULATED (IDENTIFIED) EQUIPMENT GROUNDING CONDUCTOR WITH EACH BRANCH CIRCUIT AND FEEDER
    * SEE CONDUCTOR SCHEDULE & PROPERTIES
    * SEE FEEDER SCHEDULE
11. THE PROPER SIZED JUNCTION AND/OR PULL BOXES SHALL BE INSTALLED AS REQUIRED FOR RACEWAY TRANSITIONS AND PROPER WIRE PULLING REQUIREMENTS. THE FOLLOWING APPLIES FOR ALL BRANCH CIRCUIT AND FEEDER BOXES:
    • LABEL EACH BOX ON COVERPLATE; THE PANEL AND CIRCUIT NUMBERS THAT ARE ROUTED THROUGH THE BOX.
12. ALL NON-CURRENT CARRYING METALLIC PORTIONS OF THE ELECTRICAL SYSTEM, DEVICES, COMPONENTS, ENCLOSURES, OUTLET & JUNCTION BOXES, SUPPORTS, ETC. SHALL BE BONDED TO THE FACILITY GROUNDING SYSTEM.

ELECTRICAL SYMBOL LEGEND

WIRING AND MISCELLANEOUS DEVICES

- PIER MOUNTED LUMINAIRE
- GF WP — DUPLEX RECEPTACLE – NEMA 5-20R GFCI TYPE (WEATHERPROOF)
- $ — SWITCH – TOGGLE TYPE, 20 AMPERE
- J — JUNCTION BOX – SIZE NOTED OR REQUIRED
- J — JUNCTION BOX – SIZE NOTED OR REQUIRED WITH EQUIPMENT CONNECTION
- J — JUNCTION BOX – SIZE NOTED OR REQUIRED
- BRANCH CIRCUIT – CONCEALED (#12 AWG UNLESS NOTED OTHERWISE OR REQ)
- BRANCH CIRCUIT – CONCEALED BELOW GRADE, SLAB OR FLOOR (#12 AWG UNLESS NOTED OTHERWISE OR REQ)
- BRANCH CIRCUIT – EXPOSED (#12 AWG UNLESS NOTED OTHERWISE OR REQ)
- BRANCH CIRCUIT – WITH CONDUIT BODY, TYPE NOTED OR REQUIRED
- UP — BRANCH CIRCUIT – CIRCUIT RISER UP
- DN — BRANCH CIRCUIT – CIRCUIT RISER DOWN
- 10 — BRANCH CIRCUIT – SAME AS ABOVE EXCEPT NO. 10 AWG
- 8 — BRANCH CIRCUIT – SAME AS ABOVE EXCEPT NO. 8 AWG
- BRANCH CIRCUIT – EMPTY CONDUIT
- BRANCH CIRCUIT – FLEXIBLE CONDUIT
- BRANCH CIRCUIT – HOMERUN TO PANEL TO 20A/1P BREAKER UNLESS NOTED OTHERWISE

EQUIPMENT

- LIGHTING OR POWER BRANCH CIRCUIT PANELBOARD
- DISCONNECT SWITCH – NONFUSIBLE
- DISCONNECT – FUSIBLE
- B — ENCLOSED CIRCUIT BREAKER
- M — ELECTRIC METER
- TS — TIME SWITCH – NEMA 4X
- PE — PHOTO-CELL
- T — TRANSFORMER
- MOTOR – SIZE AND CHARACTERISTICS INDICATED
- MARINE PEDESTAL – SEE DETAIL A/E502

MISCELLANEOUS DEVICES

- CON — CONTROL PANEL

DIAGRAM SYMBOLS

- TRANSFORMER WINDINGS
- INSTRUMENT TRANSFORMER
- CURRENT TRANSFORMER
- ALTERNATING CURRENT POWER SOURCE
- DIRECT CURRENT POWER SOURCE
- CIRCUIT BREAKER
- NONFUSIBLE SWITCH
- FUSIBLE SWITCH
- TRANSFER SWITCH
- CONTACTS – NORMALLY OPEN
- CONTACTS – NORMALLY CLOSED
- THERMAL ELEMENT
- FUSIBLE ELEMENT
- COIL
- FUSE
- BATTERY
- WEATHERHEAD
- SPLICE
- DRAWOUT CONNECTION
- BUILDING PENETRATION/SEAL

GROUNDING

- GROUNDING ELECTRODE CONNECTION
- SURGE ARRESTOR WITH GROUNDING CONNECTION
- SURGE PROTECTION DEVICE
- G — BARE CU GRD CONDUCTOR BELOW GRADE
- ROD — DRIVEN GRD ROD CONNECTED TO GRD CONDUCTOR

ABBREVIATIONS

@	AT
&	AND
A	AMPERE
AB	ABOVE
AC	ALTERNATING CURRENT
A/C	AIR CONDITIONING
ACB	AIR CIRCUIT BREAKER
AFC	ABOVE FINISH CEILING
AFF	ABOVE FINISH FLOOR
AFG	ABOVE FINISH GRADE
AHJ	AUTHORITY HAVING JURISDICTION
AIC	AMPERE INTERRUPTING CAPACITY
ALUM	ALUMINUM
APPROX	APPROXIMATE(LY)
ARCH	ARCHITECT(URAL)
ATS	AUTOMATIC TRANSFER SWITCH
AUX	AUXILIARY
AWG	AMERICAN WIRE GAGE
BK BD	BACKBOARD
BKR	BREAKER
BLDG	BUILDING
C	CONDUIT
CAB	CABINET
CCU	CENTRAL CONTROL UNIT
CIR	CIRCUIT
CL	CURRENT LIMITING
CLG	CEILING
CON	CONTROL
CPT	CONTROL POWER TRANSFORMER
CPU	CENTRAL PROCESS UNIT
CT	CURRENT TRANSFORMER
CTV	CABLE TELEVISION
CU	COPPER
CWP	COLD WATER PIPE
DB	DIRECT BURIAL
DC	DIRECT CURRENT
DEG	DEGREE
DETD	DUAL ELEMENT TIME DELAY
DIR	DIRECTED
DISC	DISCONNECT SWITCH
DN	DOWN
DPST	DOUBLE POLE – SINGLE THROW
DPDT	DOUBLE POLE – DOUBLE THROW
EA	EACH
EXH	EXHAUST
EMCS	ENERGY MANAGEMENT CONTROL SYSTEM
EM	EMERGENCY
EMT	ELECTRICAL METALLIC TUBING
EP	EXPLOSION PROOF
EQUIP	EQUIPMENT
ES	ENERGY SAVINGS
EWC	ELECTRIC WATER COOLER
F	FUSE
f	FLUSH MTG
FA	FIRE ALARM
FAC	FIRE ALARM CONTROL PANEL
FIN	FINISHED
FL	FLOOR
FLA	FULL LOAD AMPERES (NAME PLATE DATA)
FLC	FULL LOAD CURRENT (CODE TABLES)
FMC	FLEXIBLE METAL CONDUIT
GA	GAUGE
GALV	GALVANIZED
GCB	GAS CIRCUIT BREAKER
GFCI	GROUND FAULT CIRCUIT INTERRUPTER
GFI	GROUND FAULT INTERRUPTER
GRC	GALVANIZED RIGID METAL CONDUIT
GRD	GROUND
HD	HEAVY DUTY
HDDS	HEAVY DUTY DISCONNECT SWITCH
HH	HANDHOLE
HOA	HAND/OFF/AUTO
HP	HORSEPOWER (33k FT-lbs OF WORK PER MINUTE)
HV	HIGH VOLTAGE
HVAC	HEATING/VENTILATION/AIR CONDITIONING
HZ	HERTZ (CYCLES PER SECOND)
ICCB	INSULATED CASE CIRCUIT BREAKER
ID	INSIDE DIAMETER
IG	ISOLATED GROUND
IMC	INTERMEDIATE METAL CONDUIT
J-BOX	JUNCTION BOX
k	KILO (1000)
kCMIL	KILO CIRCULAR MILS
kV	KILO VOLTS
kVA	KILO VOLT – AMPERES
kW	KILO WATTS
LFC	LIQUIDTIGHT FLEXIBLE CONDUIT
LGT	LIGHT(ING)
LV	LOW VOLTAGE
LVPCB	LOW VOLTAGE POWER CIRCUIT BREAKER
MANUF	MANUFACTURER
MAX	MAXIMUM
MCB	MAIN CIRCUIT BREAKER
MCC	MOTOR CONTROL CENTER
MCCB	MOLDED CASE CIRCUIT BREABER
MCM	1000 CIRCULAR MILS
MECH	MECHANICAL
MH	MANHOLE
MIN	MINIMUM
MISC	MISCELLANEOUS
MLO	MAIN LUGS ONLY
MTD	MOUNTED
MTG	MOUNTING
MTS	MANUAL TRANSFER SWITCH
MV	MEDIUM VOLTAGE
N	NEUTRAL
NA	NOT APPLICABLE
N.C.	NORMALLY CLOSED
NEC	NATIONAL ELECTRICAL CODE
NEMA	NATIONAL ELECTRICAL MANUFACTURER'S ASSO.
NFPA	NATIONAL FIRE PROTECTION ASSOCIATION
NL	NIGHT LIGHT
N.O.	NORMALLY OPEN
NO. OR #	NUMBER
OCD	OVER CURRENT PROTECTION DEVICE
OD	OUTSIDE DIAMETER
OL	OVER LOAD
P	POLE
PF	POWER FACTOR
PH OR Ø	PHASE
PMS	PAD MOUNTED SWITCH
PMT	PAD MOUNTED TRANSFORMER
PNL	PANEL
PRI	PRIMARY
PROVIDE	FURNISH AND INSTALL
PT	POTENTIAL TRANSFORMER
PVC	POLYVINYL CHLORIDE
PW	PART WINDING
REF	REFERENCE
REQ	REQUIRED
RLA	RATED LOAD AMPERES
RM	ROOM
RMC	RIGID METALLIC CONDUIT
RNC	RIGID NONMETALLIC CONDUIT
ROR	RATE-OF-RISER
RT	RAINTIGHT
SC	SHORT CIRCUIT
SCCR	SHORT CIRCUIT CURRENT RATING
SCH	SCHEDULE
SD	SERVICE DROP
SE	SERVICE ENTRANCE
SEC	SECONDARY
SF6	GAS CIRCUIT BREAKER
SH	SHEET
SI	INTERNATIONAL SYSTEM OF UNITS
SL	SERVICE LATERAL
SLD	SINGLE LINE DIAGRAM
SMR	SURFACE METALLIC RACEWAY
SN	SOLID NEUTRAL
SPECS	SPECIFICATIONS
SPD	SURGE PROTECTION DEVICE
SPDT	SINGLE POLE – DOUBLE THROW
SPST	SINGLE POLE – SINGLE THROW
SS	STAINLESS STEEL
STATCOM	STATIC REACTIVE COMPENSATION
STS	STATIC TRANSFER SWITCH
SVC	STATIC VAR COMPENSATION
SW	SWITCH
SW BD	SWITCH BOARD
SW GR	SWITCHGEAR
TB	TERMINAL BACKBOARD
TELE	TELEPHONE
TEMP	TEMPERATURE
TVSS	TRANSIENT VOLTAGE SURGE SUPPRESSORS
TYP	TYPICAL
UL	UNDERWRITER'S LABORATORY
ULSE	UNDERWRITER'S LABORATORY SERVICE ENTRANCE
V	VOLTAGE
VAC	VOLTS ALTERNATING CURRENT
VDC	VOLTS DIRECT CURRENT
VENT	VENTILATION
W	WIRE
W/	WITH
WP	WEATHERPROOF
WT	WATERTIGHT
Z	ZONE
'	FEET
"	INCHES

GENERAL LEGEND DEFINITIONS

CEILING OUTLET – BOX, FLANGE, SUPPORT, ETC.
WALL OUTLET – BOX, FLANGE, SUPPORT WITH LUMINAIRE OR DEVICE & DEVICE PLATE.
WALL SWITCH – BOX, FLANGE, SUPPORT, DEVICE & DEVICE PLATE.
JUNCTION BOX – BOX, SUPPORT & COVER.
BRANCH CIRCUIT – CONDUIT, CONDUCTORS & CONTINUOUS GROUNDING PATH.
(SEE DESIGNATION BLOCKS)
EQUIPMENT GROUND – CONDUCTOR FOR CONNECTING NONCURRENT-CARRYING METAL PARTS OF EQUIPMENT, ENCLOSURES, RACEWAYS, ETC., SIZED IN ACCORDANCE WITH NFPA 70, CURRENT N.E.C.

US Army Corps of Engineers®

MARK	DESCRIPTION	DATE

DESIGNED BY: KLH
DRAWN BY: SWC/TEV
CHECKED BY: KLH
SUBMITTED BY: KLH
SIZE: ANSI D
ISSUE DATE: NOVEMBER 2017
SOLICITATION NO.: -
CONTRACT NO.: -
PROJECT NUMBER: M017EV17
FILE NAME: E001EV17.dwg

US ARMY CORPS OF ENGINEERS
MOBILE DISTRICT
MOBILE, ALABAMA

BASKERVILLE-DONOVAN, INC.
DAS ENGINEERS & ARCHITECTS
2201 MONT. LAKE DRIVE, SUITE 650, MOBILE, ALABAMA 36618 (251) 343-0311
Engineering Business ID: 00000080
Pensacola · Tallahassee · Mobile · Montgomery · Huntsville · Brevard County · Tampa

PONCE, PUERTO RICO
PONCE MARINE UNIT - PIER & BOAT RAMP REPLACEMENT

ELECTRICAL SYMBOL LEGEND & ABBREVIATIONS

SHEET ID
E-001

CONDUCTOR SCHEDULE & PROPERTIES DESIGNATIONS

SIZE AWG OR kCMIL	AREA mm2 (NOTE 4)	AREA CIRCULAR MILS
18	1.0	1,620
16	1.5	2,580
14	2.5	4,110
12	4	6,530
10	6	10,380
8	10	16,510
6	16	26,240
4	25	41,740
2	35	66,360
1/0	50	105,600
2/0	70	133,100
3/0	95	167,800
4/0	120	211,600
300	150	300,000
350	185	350,000
500	240	500,000
600	300	600,000
750	400	750,000

NOTES

1. UNLESS NOTED OTHERWISE ALL LOW VOLTAGE CONDUCTORS SHALL BE RATED AT 600 VOLTS AND THE INSTALLATION BASED UPON AN AMBIENT TEMPERATURE OF 30°C AS FOLLOWS:
   - METAL – COPPER
   - INSULATION – SEE SPECIFICATIONS
   - TEMPERATURE RATING – 75°C
   - LOCATION – WET OR DRY
2. CONDUCTORS SHALL BE IDENTIFIED BY SURFACE MARKINGS FROM THE MANUFACTURER:
   - MANUFACTURER'S IDENTIFICATION
   - CONDUCTOR SIZE AND METAL
   - VOLTAGE RATING
   - UL LISTING
   - TYPE DESIGNATION & OPTIONAL RATINGS
3. CONDUCTORS SHALL BE LABELED BY THE CONTRACTOR, FOR ANY CIRCUIT 60 AMPERES AND HIGHER, IN EACH PULLBOX, J-BOX OR WIREWAY AS FOLLOWS:
   - PANEL SOURCE & CIRCUIT BREAKER SIZE
   - DESTINATION (LOAD SERVED)
4. THE mm^2 VALUE INDICATED ARE ACTUAL TRADE SIZES THAT CAN BE PURCHASED AND CONSIDERED EQUAL. THEY ARE NOT THE ACTUAL MEASURED AREA.

CONDUIT & TUBING SCHEDULE DESIGNATIONS

CONDUIT SIZE: METRIC DESIGNATOR (mm)	CONDUIT SIZE: NEC TRADE SIZE REF NO.
12	3/8
16	1/2
21	3/4
27	1
35	1 1/4
41	1 1/2
53	2
63	2 1/2
78	3
91	3 1/2
103	4
129	5
155	6

NOTES

1. THE METRIC DESIGNATORS AND TRADE SIZES ARE FOR IDENTIFICATION PURPOSES ONLY AND NOT EXACT DIMENSIONS.
2. SEE NEC TABLE FOR METRIC DESIGNATOR AND TRADE SIZES.
3. MINIMUM SIZE CONDUIT OR TUBING SYSTEM TO BE USED SHALL BE 16mm. THE 12mm SHALL BE USED ONLY FOR SPECIAL EQUIPMENT CONNECTIONS OR LUMINAIRE WHIPS AS AN ASSEMBLY COMPONENT OR INTEGRAL PARTS OF EQUIPMENT.
4. CONDUIT FILL SHALL BE BASED ON 40% FILL OF CROSS SECTION OF CONDUIT FOR NOMINAL CONDITIONS:
   - 3 OR MORE CONDUCTORS
   - LENGTH OF PULLS MINIMIZED
   - NUMBER OF BENDS LIMITED
   - ADEQUATE HEAT DISSIPATION

   OTHERWISE CONDUIT SIZE SHALL BE INCREASED.
5. SEE TYPICAL RACEWAY/CONDUIT INSTALLATION DETAILS.

GENERAL BRANCH CIRCUIT DESIGNATIONS – SI

- 2-4mm2 & 1-4mm2 GRD – 16mmC
- 3-4mm2 & 1#4mm2 GRD – 16mmC
- 4-4mm2 & 1-4mm2 GRD – 21mmC
- 5-4mm2 & 1-4mm2 GRD – 21mmC, ETC.
- 10 2-6mm2 & 1-6mm2 GRD – 16mmC
- 10 3-6mm2 & 1-6mm2 GRD – 21mmC, ETC.
- 8 2-10mm2 & 1-6mm2 GRD – 21mmC
- 8 3-10mm2 & 1-6mm2 GRD – 27mmC, ETC.
- 6 3-16mm2 & 1-6mm2 GRD – 27mmC, ETC.

NOTES:

1. LARGER SIZE CONDUCTORS SHALL BE USED WHEN INDICATED AND AS REQUIRED FOR DERATING.
2. ALL CIRCUITS SHALL CONTAIN A GREEN EQUIPMENT GRD CONDUCTOR.
3. EQUIPMENT GROUND CONDUCTOR SHALL BE AS FOLLOWS UNLESS OTHERWISE INDICATED:
   - 4mm2 CIRCUIT – 4mm2 GRD
   - 6mm2 CIRCUIT – 6mm2 GRD
   - 10mm2 CIRCUIT – 6mm2 GRD
4. UNLESS OTHERWISE INDICATED, CONDUIT SIZE IS BASED UPON MAX NO. ALLOWED BY NEC UTILIZING A MAX ALLOWABLE PERCENTAGE FILL OF 40%. SEE CHAPTER 9 OF NEC.
5. METRIC DESIGNATORS ARE BASED UPON INDUSTRY STANDARDS. SEE CONDUIT AND TUBING SCHEDULE.

GENERAL BRANCH CIRCUIT DESIGNATIONS – ENG

- 2#12 & 1#12 GRD – 1/2"C
- 3#12 & 1#12 GRD – 1/2"C
- 4#12 & 1#12 GRD – 3/4"C
- 5#12 & 1#12 GRD – 3/4"C, ETC..
- 10 2#10 & 1#10 GRD – 1/2"C
- 10 3#10 & 1#10 GRD – 3/4"C, ETC.
- 8 2#8 & 1#10 GRD – 3/4"C
- 8 3#8 & 1#10 GRD – 1"C, ETC.
- 6 3#6 & 1#10 GRD – 1"C, ETC.

NOTES:

1. LARGER SIZE CONDUCTORS SHALL BE USED WHEN INDICATED AND AS REQUIRED FOR DERATING.
2. ALL CIRCUITS SHALL CONTAIN A GREEN EQUIPMENT GRD CONDUCTOR.
3. EQUIPMENT GROUND CONDUCTOR SHALL BE AS FOLLOWS UNLESS OTHERWISE INDICATED:
   - #12 AWG CIRCUIT – #12 GRD
   - #10 AWG CIRCUIT – #10 GRD
   - #8 AWG CIRCUIT – #10 GRD
4. UNLESS OTHERWISE INDICATED, CONDUIT SIZE IS BASED UPON MAX NO. ALLOWED BY NEC UTILIZING A MAX ALLOWABLE PERCENTAGE FILL OF 40%. SEE CHAPTER 9 OF NEC.
5. METRIC DESIGNATORS ARE BASED UPON INDUSTRY STANDARDS. SEE CONDUIT AND TUBING SCHEDULE.

TYPICAL FEEDER DESIGNATIONS

_#_ & 1#_GRD – _C (_A/_P)

- NUMBER OF CIRCUIT CONDUCTORS
- SIZE OF CIRCUIT CONDUCTORS "AWG UNLESS NOTED kCMIL"
- PROTECTIVE DEVICE TO WHICH THE CIRCUIT IS CONNECTED
- CONDUIT SIZE
- SIZE OF GROUNDING CONDUCTOR

NOTES:

1. CONDUCTOR INSULATION TO BE 600V UNLESS OTHERWISE INDICATED.
2. SEE FEEDER SCHEDULE

DETAIL AND SECTION DESIGNATIONS

- DETAIL IDENTIFICATION
- SHEET ON WHICH DETAIL IS DRAWN
- SECTION IDENTIFICATION
- SHEET ON WHICH SECTION IS DRAWN
- ELEVATION IDENTIFICATION
- SHEET ON WHICH ELEVATION IS DRAWN

TYPICAL NOTE REFERENCE

SEE ___ ___ /___ .

- SHEET ON WHICH DRAWN
- DETAIL, SECTION OR ELEVATION IDENTIFICATION
- DETAIL, SECTION OR ELEVATION

KEY DESIGNATIONS

MARK	PURPOSE	NOTES
A	DIMENSION REFERENCE	SEE CORRESPONDING DIMENSION BLOCK APPLICABLE LETTER INDICATED
1	KEY NOTE REFERENCE	SEE CORRESPONDING KEY NOTE APPLICABLE NUMBER INDICATED
	EQUIPMENT REFERENCE	SEE CORRESPONDING EQUIPMENT SCHEDULE COORDINATE WITH APPLICABLE DIVISIONS
A	FEEDER REFERENCE	SEE CORRESPONDING FEEDER SCHEDULE APPLICABLE LETTER INDICATED

TYPICAL LUMINAIRE, DEVICE AND CIRCUIT DESIGNATIONS

- a 1 A — LUMINAIRE TYPE 'A', CIRCUIT NO. 1, CONTROLLED BY SWITCH "a"
- FT2 2 b — LUMINAIRE TYPE 'FT2', CIRCUIT NO. 2, CONTROLLED BY SWITCH "b"
- 2 — WALL OUTLET WITH RECEPTACLE NOTED, CONNECT TO CIRCUIT NO. 2
- L-1 — HOMERUN TO PANEL 'L', CONNECT TO CIRCUIT NO 1
- 1 J — EQUIPMENT CONNECTION – CONNECT TO CIRCUIT NO. 1

TYPICAL GANGABLE SWITCH DESIGNATIONS

SWITCH ASSEMBLY (TYPE NOTED)

- COMMON DEVICE PLATE
- bSa
- SWITCH FOR OUTLETS MARK "a"
- SWITCH FOR OUTLETS MARK "b"

US Army Corps of Engineers®

MARK	DESCRIPTION	DATE

ISSUE DATE: NOVEMBER 2017
SOLICITATION NO.: -
CONTRACT NO.: -
PROJECT NUMBER: M017EV17
FILE NAME: E002EV17.dwg

DESIGNED BY: KLH
DRAWN BY: -
CHECKED BY: KLH
SUBMITTED BY: KLH
SIZE: ANSI D

US ARMY CORPS OF ENGINEERS
MOBILE DISTRICT
MOBILE, ALABAMA

BASKERVILLE-DONOVAN, INC.
ARCHITECTS ENGINEERS PLANNERS
1201 HONT GUM DRIVE, SUITE 555, MOBILE, AL 36609 (251) 380-0011
ENGINEERING BUSINESS CERTIFICATE #3-00003240
Pensacola • Panama City Beach • Destin/Fort Walton • Mobile • Brevard County • Tampa

PONCE, PUERTO RICO
PONCE MARINE UNIT - PIER & BOAT RAMP REPLACEMENT

GENERAL ELECTRICAL DESIGNATIONS

SHEET ID
E-002

AERIAL SITE LEGEND

NEW	EXISTING	DESCRIPTION
●	○	UTILITY POLE - SEE POLE SCHEDULE
—<	—<	SINGLE DOWN GUY AND ANCHOR ASSEMBLY
—<G2	—<G2	DOUBLE DOWN GUY AND ANCHOR ASSEMBLIES
▲	△	POLE MTD TRANSFORMER
GS	GS	GROUP OPERATED POLE MTD SWITCH ASSEMBLY
		CUTOUT SWITCH ASSEMBLY
—OT—	— EOT —	OVERHEAD TRANSMISSION LINE
—OP—	— EOP —	OVERHEAD PRIMARY
—OS—	— EOS —	OVERHEAD SECONDARY
—SL—	— ESL —	OVERHEAD STREET LIGHT CIRCUIT
—OC—	— EOC —	OVERHEAD COMMUNICATIONS CIRCUIT
— G —	—EG—	OVERHEAD GUY SPAN
—LP—		OVERHEAD SHIELD WIRE
—		FLOOD LIGHT ASSEMBLY

UNDERGROUND SITE LEGEND

NEW	EXISTING	DESCRIPTION
T	T EX	PAD MOUNTED TRANSFORMER (PMT)
S	S EX	PAD MOUNTED SWITCH (PMS)
■ MH	□ EMH	MANHOLE
⊠ HH	⊠ EHH	HANDHOLE
		SINGLE UNIT LIGHTING STANDARD - TYPE NOTED
		DOUBLE UNIT LIGHTING STANDARD - TYPE NOTED
		LIGHTING STANDARD LUMINAIRE - NIGHT LIGHT
● BD	○ BD	LIGHTING BOLLARD
		GRADE MOUNTED FLOOD LIGHT - TYPE NOTED
—UP—	— EUP —	UNDERGROUND PRIMARY
—US—	— EUS —	UNDERGROUND SECONDARY
—UC—	— EUC —	UNDERGROUND COMMUNICATIONS

MISCELLANEOUS SITE LEGEND

—W—	WATER LINE
	FIRE HYDRANT
—SS—	SANITARY SEWER LINE
—Ⓢ—	SANITARY SEWER MANHOLE
— G —	GAS LINE
G	GAS METER
—×—×—×—	FENCING

SITE NOTES

1. THE CONTRACTOR IS RESPONSIBLE TO VERIFY ALL EXISTING SITE CONDITIONS. ANY EXISTING BURIED OR OVERHEAD UTILITY SYSTEMS IN DIRECT CONFLICT WITH PROPOSED SITE IMPROVEMENTS SHALL BE RELOCATED BY THE CONTRACTOR.
2. PROPER CARE SHALL BE TAKEN TO ENSURE CONTINUOUS CONTINUITY OF ALL UTILITY SYSTEMS. ALL SYSTEM DISRUPTIONS SHALL BE SCHEDULED AND APPROVED IN WRITING PRIOR TO DISCONNECTING. ANY DAMAGED UTILITY SYSTEMS SHALL BE REPAIRED AND/OR REPLACED IMMEDIATELY AT THE CONTRACTORS EXPENSE. SEE GENERAL DEMOLITION NOTE 6.

US Army Corps of Engineers®

MARK	DESCRIPTION	DATE

DESIGNED BY: KLH
DRAWN BY: EMH, TEV
CHECKED BY: KLH
ISSUE DATE: NOVEMBER 2017
SOLICITATION NO.:
CONTRACT NO.:
PROJECT NUMBER: M017EV17
SUBMITTED BY: KLH
FILE NAME: E100EV17.dwg
SIZE: ANSI D

US ARMY CORPS OF ENGINEERS
MOBILE DISTRICT
MOBILE, ALABAMA

BASKERVILLE-DONOVAN, INC.
ENGINEERS
321 NORTH FRANKLIN STREET, TAMPA, FLORIDA 33602-4151
ENGINEERING BUSINESS: EB-0000026
Pensacola • Panama City Beach • Tallahassee • Mobile • Baldwin County • Tampa

PONCE, PUERTO RICO
PONCE MARINE UNIT - PIER & BOAT RAMP REPLACEMENT

ELECTRICAL SITE LEGEND AND NOTES

SHEET ID
E-100

EXISTING PROPERTY LIMITS (APPROXIMATE) (TYP.)
EXISTING SHED
EXISTING CANOPY WITH CONEX FACILITY
EXISTING CLAM SHELL COVER
EXISTING BUILDING
EXISTING FLEXIBLE PAVEMENT ROADWAY (TYP.)
EXISTING GENERATOR
EXISTING CHAINLINK FENCE (TYP.)
EXISTING GRATE INLET (TYP.)
EXISTING DUMPSTER (TYP.)
EXISTING PARKING LOT STRIPING (TYP.)
EXISTING FLEXIBLE PAVEMENT PARKING LOT (TYP.)
EXISTING CONCRETE SIDEWALK (TYP.)
EXISTING U.S. CUSTOM FACILITY
EXISTING TREE (TYP.)
EXISTING CONCRETE PARKING LOT (TYP.)
EXISTING CONCRETE PARKING BUMPER (TYP.)
NEW POLE WITH CCTV CAMERA
* SEE DETAIL A/E-801
EX: CCTV CAMERA
EX: TELECOM EQUIP ROOM
EXISTING ROLLING GATE (TYP.)
EXISTING CONCRETE RAMP (TYP.)
EXISTING FLEXIBLE PAVEMENT PARKING LOT (TYP.)
PIER LIGHTING OVER-RIDE SWITCH
EX: PANEL A2
EXISTING PEDESTRIAN GATE (TYP.)
P-15
EX: ATS-1
* 400A/2P
EXISTING GUARD HUT
BACKBOARD P
* TX-P2
* PNL-P
EX: GENERATOR
80kW/80kVA
EX: PMT-S
75 kVA
SEE SHEET E201
EXISTING CONCRETE APRON (TYP.)
EXISTING ALUMINUM CANOPY
EXISTING U.S. COAST GUARD OFFICE MARINE SAFETY DEPARTMENT (CONCRETE BUILDING)
EUP
EX: UTILITY PRIMARY
EX: SITE METER/MCB
400A/2P
EUS
EUC
EXISTING CONCRETE CURB AND SIDEWALK (TYP.)
EX: FLOOD LIGHT
EXISTING CHAINLINK FENCE (TYP.)
EXISTING BUILDING
EXISTING EDGE OF WATER (TYP.)
EXISTING PEDESTRIAN GATE (TYP.)
EXISTING VEHICULAR SWING GATE (TYP.)
EXISTING PORTABLE METAL SHED (TYP.)
EXISTING CONCRETE SIDEWALK (TYP.)
SEE DETAIL C/E502
EX: PANEL A1
EX: CCTV HEAD-END EQUIP
* SEE SHEET E-801
EXISTING RESTROOM BUILDING
TX: P1
15 kVA
EXISTING FLEXIBLE PAVEMENT ROADWAY (TYP.)
EXISTING ANTENNA WITH STEEL WALKWAY (TYP.)
EXISTING CONCRETE APRON (TYP.)
EXISTING CONCRETE SIDEWALK (TYP.)
EXISTING TREE (TYP.)
EXISTING RESTROOM BUILDING
℄ ALIGNMENT OF BOAT RAMP (SEE SHT. C-301 FOR ℄ PROFILE)
0 3 7.5 15
SCALE: 1:150m

US Army Corps of Engineers®

MARK	DESCRIPTION	DATE

DESIGNED BY: KLH
DRAWN BY: EWH, TEW
CHECKED BY: -
SUBMITTED BY: KLH
SIZE: ANSI D
ISSUE DATE: NOVEMBER 2017
SOLICITATION NO.: -
CONTRACT NO.: -
PROJECT NUMBER: M017EV17
FILE NAME: E101EV17.dwg

US ARMY CORPS OF ENGINEERS
MOBILE DISTRICT
MOBILE, ALABAMA

BASKERVILLE-DONOVAN, INC.
Innovative Infrastructure Solutions
CDP, INC. - NORTH CAROLINA ENGINEERING FIRM C-0558 - FLORIDA ENGINEERING BUSINESS EB-0000806
Pensacola - Panama City Beach - Tallahassee - Mobile - Brevard County - Tampa

PONCE, PUERTO RICO
PONCE MARINE UNIT - PIER & BOAT RAMP REPLACEMENT

ELECTRICAL SITE PLAN

SHEET ID
E-101

KEYED NOTES

(1) TYP EXPANSION/DEFLECTION FITTING LOCATION.
* SEE SHEET NOTE 2

SHEET NOTES

1. CONDUIT FOR PIER LIGHTING AND POWER PEDESTALS ARE TO BE POURED IN CONCRETE. SEE DETAIL B/E-502.
2. INSTALL EXPANSION/DEFLECTION FITTINGS AT ALL PIER EXPANSION JOINTS. COORDINATE WITH SHEET S-101 FOR ALL LOCATIONS.

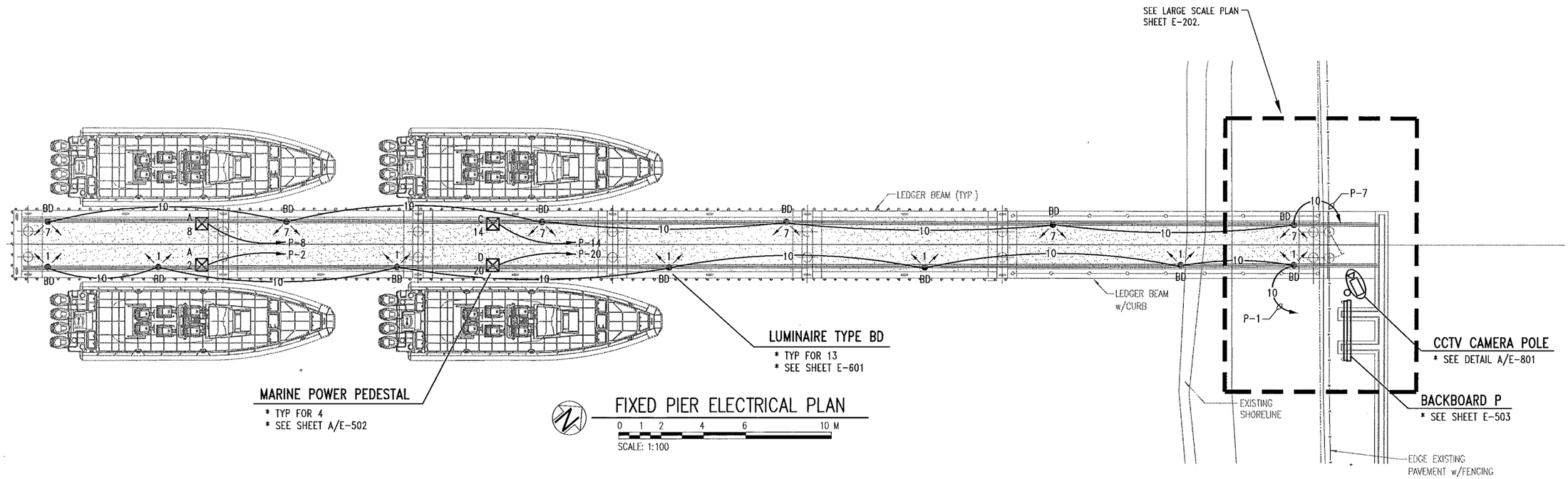

FIXED PIER ELECTRICAL PLAN

0 1 2 4 6 10 M
SCALE: 1:100

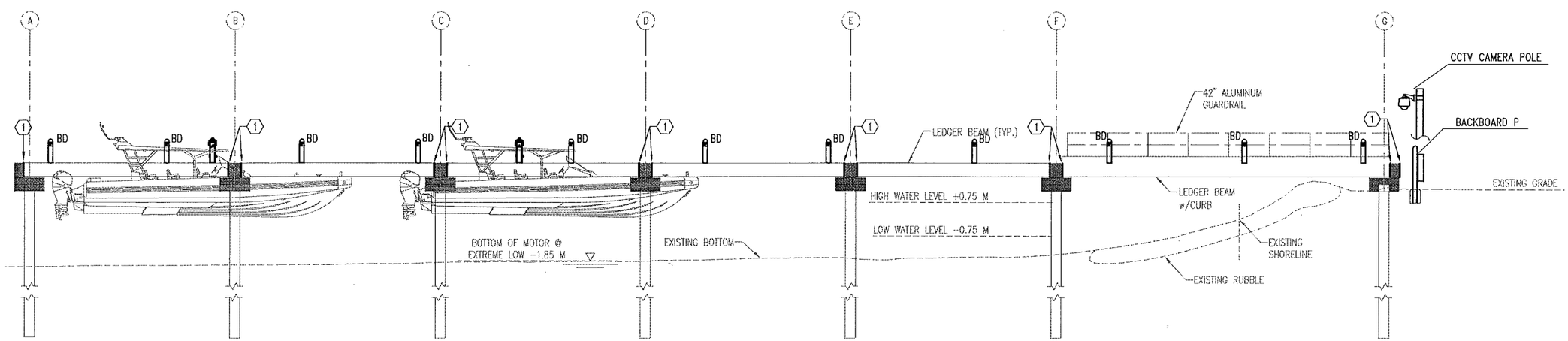

FIXED PIER ELEVATION

0 1 2 4 6 10 M
SCALE: 1:100

US Army Corps of Engineers®

MARK	DESCRIPTION	DATE

DESIGNED BY: KLH
DRAWN BY: EWH, TEW
CHECKED BY: KLH
SUBMITTED BY: KLH
SIZE: ANSI D
ISSUE DATE: NOVEMBER 2017
SOLICITATION NO.:
CONTRACT NO.:
PROJECT NUMBER: M0TEV17
FILE NAME: E201EV17.dwg

US ARMY CORPS OF ENGINEERS
MOBILE DISTRICT
MOBILE, ALABAMA

BAKERVILLE-DONOVAN, INC.
Innovative Infrastructure Solutions
ENGINEERING BUSINESS #00010011 ARCHITECTURE BUSINESS #AC0001104011
Pensacola - Panama City Beach - Tallahassee - Mobile - Brevard County - Tampa

PONCE, PUERTO RICO
PONCE MARINE UNIT - PIER & BOAT RAMP REPLACEMENT

FIXED PIER ELECTRICAL PLAN

SHEET ID
E-201

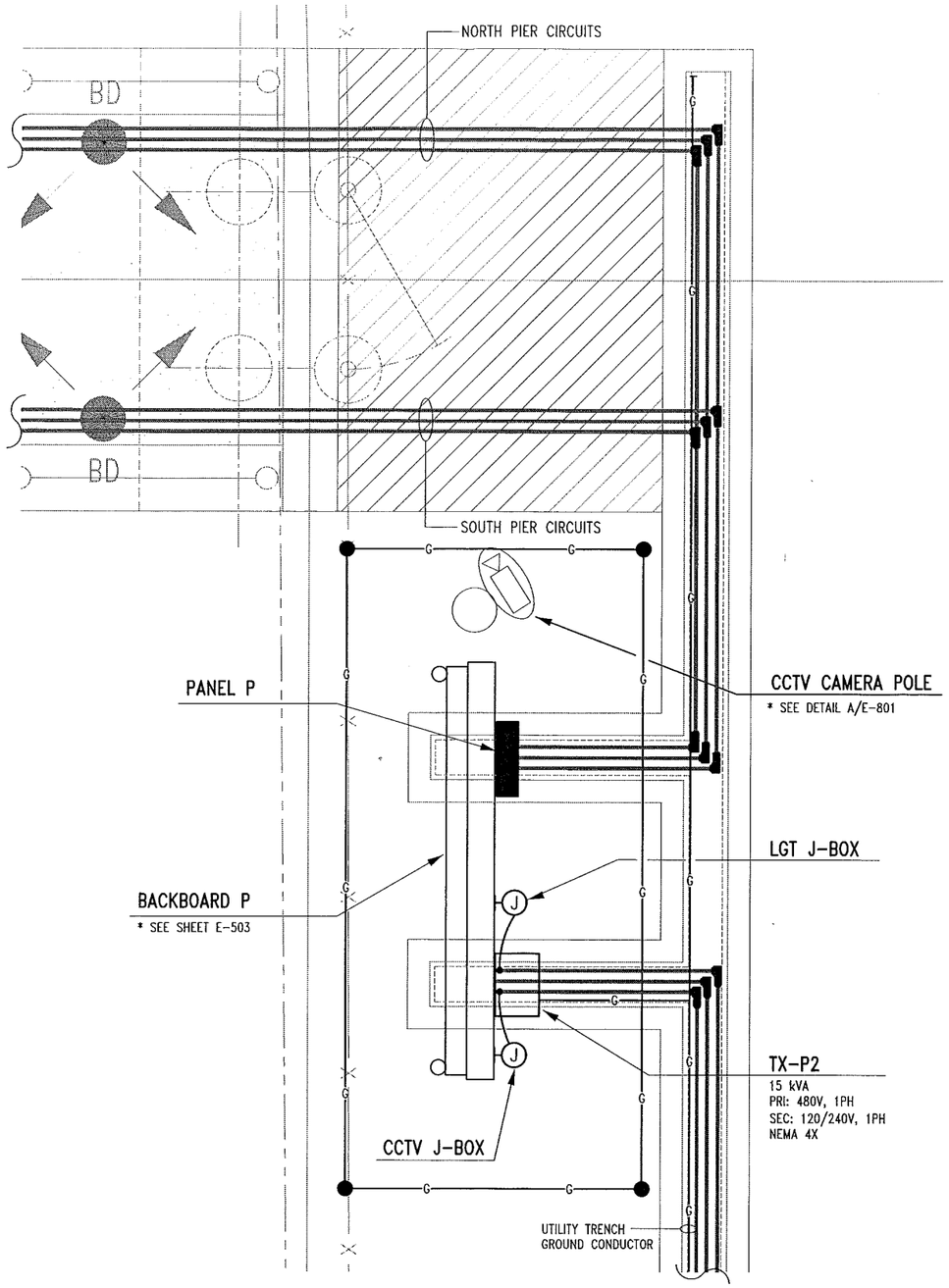

A E202 LARGE SCALE BACKBOARD PLAN

0 .5 1 1.5 2M

SCALE: 1:20

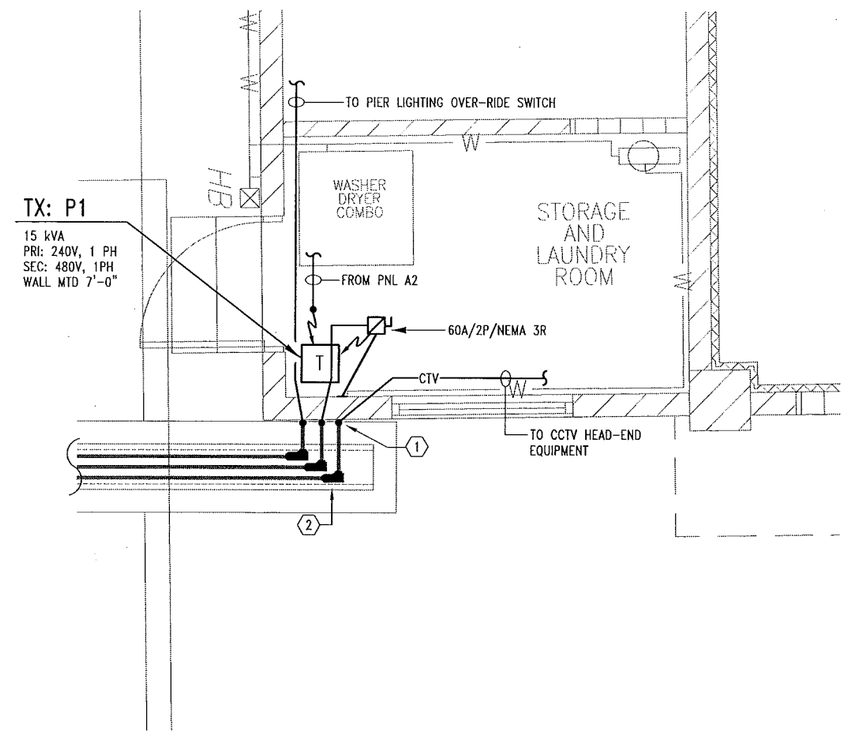

B E202 LARGE SCALE LAUNDRY ROOM PLAN

0 .5 1 1.5 2M

SCALE: 1:20

SHEET NOTES

1. CONDUIT FITTINGS SHALL BE INSTALLED IN THE UTILITY TRENCH AT LOCATIONS FOR 90° TURNS. INSTALL COVERS ACCESSIBLE FOR CABLE PULLING.

KEYED NOTES

1. EXIT BUILDING WITH 'LB' AND RUN DOWN EXTERIOR WALL.
   - * TRENCH/CUT/PATCH/REPAIR
2. INSTALL CONDUIT SYSTEMS FROM EXISTING BUILDING AND BACKBOARD-P. TURNS SHALL BE VIA CONDULET FITTINGS WITH GASKETED COVERS ON TOP FOR PULLING CONDUCTOR ACCESS.
   - * OFF-SET CONDUIT AS REQUIRED
   - * STAGGER FITTINGS AS REQUIRED
   - * SEE DETAIL C/E502

US Army Corps of Engineers®

MARK	DESCRIPTION	DATE

DESIGNED BY: KLH
DRAWN BY: EWH, TEW
CHECKED BY: KLH
SUBMITTED BY: KLH
SIZE: ANSI D
ISSUE DATE: NOVEMBER 2017
SOLICITATION NO.: -
CONTRACT NO.: -
PROJECT NUMBER: MO7TEV17
FILE NAME: E202EV17.dwg

US ARMY CORPS OF ENGINEERS
MOBILE DISTRICT
MOBILE, ALABAMA

BASKERVILLE-DONOVAN, INC.
INNOVATIVE INFRASTRUCTURE SOLUTIONS
1201 PRINCETON AVENUE, SUITE 400 (32504-1331)
EMCORES/EDWB BUSINESS ES-000020
Pensacola • Panama City Beach • Tallahassee • Milton • Brevard County • Tampa

PONCE, PUERTO RICO
PONCE MARINE UNIT - PIER & BOAT RAMP REPLACEMENT

LARGE SCALE PLANS

SHEET ID
E-202

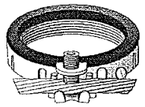

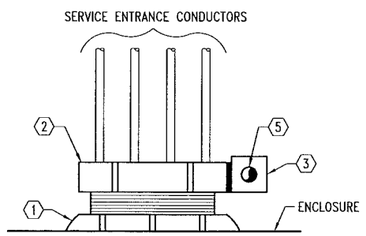

FOR SERVICE ENTRANCE CONDUITS

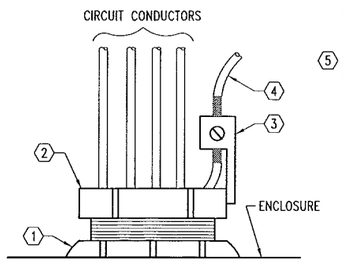

FOR FEEDER AND/OR BRANCH CIRCUITS

DETAIL KEYED NOTES

1. LOCK-NUT ASSEMBLIES
2. METAL GROUNDING BUSHING
3. COPPER GROUND LUG
4. COPPER GROUND CONDUCTOR. REMOVE INSULATION AT BUSHING, RUN THROUGH BUSHING LUG AND BOND TO RACEWAY SYSTEM. DO NOT SPLICE OR TAP.
5. CONTINUOUS COPPER GROUND CONDUCTOR FROM GROUND BUS THROUGH EACH BUSHING. DO NOT SPLICE OR TAP.

A / E501 DETAIL – TYPICAL GROUND BUSHING INSTALLATION

NO SCALE

DETAIL NOTES

1. ALL GROUND ELECTRODE CONDUCTORS, SYSTEM BONDING CONDUCTORS, ETC., RUN SEPARATELY SHALL BE PROTECTED BY A CONDUIT SYSTEM.
2. ALL SYSTEM GROUNDING OR BONDING CONDUCTORS SHALL GENERALLY BE ENCLOSED BY A GRC CONDUIT. PROVIDE GROUND BUSHINGS ON EACH END AND BOND CONDUCTORS TO RACEWAY SYSTEM.
3. SYSTEM BONDING CONDUCTORS THAT PENETRATE CONCRETE SLABS SHALL BE ENCLOSED BY A PVC CONDUIT. PROVIDE BELL END FITTING ON EACH END AND SEAL. THOSE TERMINATING AT A STUB-UP SHALL BE FLUSH WITH FLOOR.

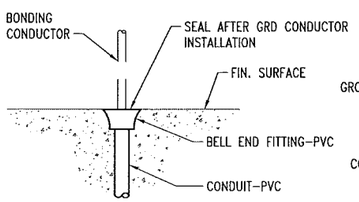

THROUGH CONCRETE

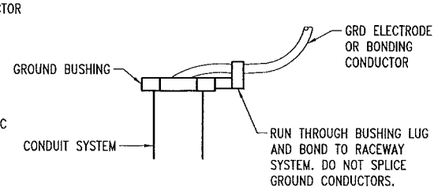

SURFACE MOUNTED

B / E501 DETAIL – TYPICAL GROUND CONDUCTOR IN CONDUIT SYSTEM

NO SCALE

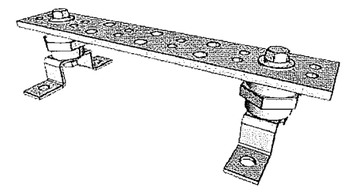

DIMENSION BLOCK		
REF	SI	ENGLISH
A	26.3mm	1-1/16"
B	14.22mm	9/16"
C	28.58mm	1-1/8"
D	25.4MM	1"
E	457MM	1'-6"

GROUND BUS NOTES

1. GROUND BUS INSTALLATION SHALL BE IN ACCORDANCE WITH THIS DETAIL AND AS INDICATED ON THE DRAWINGS.

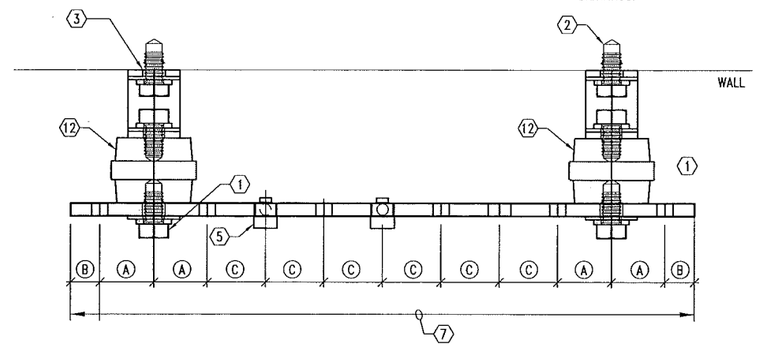

PLAN VIEW

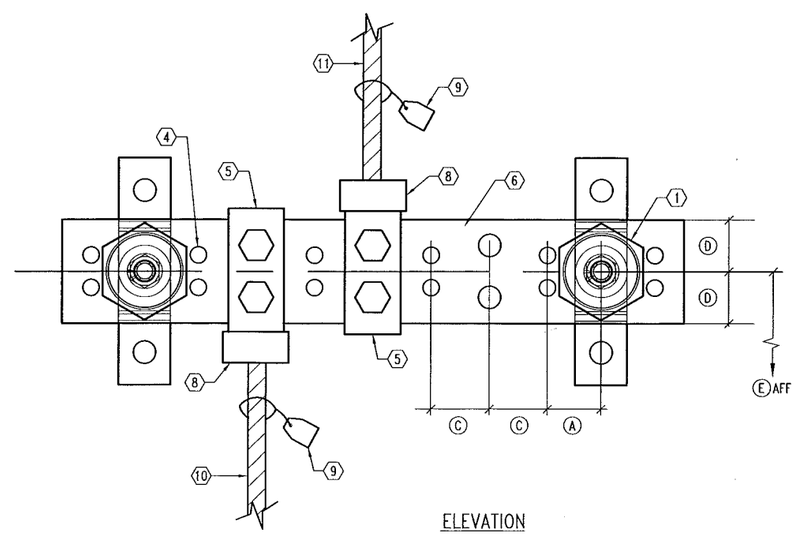

ELEVATION

C / E501 DETAIL – TYPICAL GROUND BUS PROVISIONS

NO SCALE

SHEET NOTES

1. ALL GROUNDING AND BONDING SHALL BE IN ACCORDANCE WITH THE NEC, NESC, IEEE, ANSI AND UL STANDARDS.
2. ALL DIMENSIONING INDICATED IN THESE DOCUMENTS ARE FOR REFERENCE AND COORDINATION PURPOSES ONLY. THE CONTRACTOR IS RESPONSIBLE FOR VERIFYING ALL DIMENSIONS IN THE FIELD.
3. THE PURPOSE OF THE GROUNDING AND BONDING SYSTEM IS TO ESTABLISH ALL EQUIPMENT ENCLOSURES, NON-CURRENT CARRYING METALLIC PORTIONS OF THE ELECTRICAL DISTRIBUTION SYSTEM, METAL PIPING, METAL BUILDING FRAME, ETC., AT A ZERO POTENTIAL RELATIVE TO THE EARTH GROUND AND PROVIDE FOR A SAFE, LOW IMPEDANCE RETURN PATH FOR GROUND-FAULT CURRENT. THIS SHALL BE ACCOMPLISHED IN THE FOLLOWING MANNER:
   a. PROVIDE A SOLIDLY GROUNDED SECONDARY SYSTEM.
   b. INTER-CONNECT ALL GROUND BUSES AND POINTS IN THE SYSTEM WITH A COPPER GRD CONDUCTOR (BUS) SYSTEM.
   c. ALL METALLIC RACEWAYS SHALL BE UL APPROVED AND MADE-UP TIGHT AT ALL COUPLINGS AND TERMINATIONS.
   d. ALL GROUND CONDUCTORS IN CIRCUITS SHALL BE CONTAINED WITHIN THE SAME RACEWAY AS CURRENT CARRYING CONDUCTORS.
   e. ALL SPLICES AND TERMINATIONS SHALL BE MADE TIGHT AND AS SUCH TO PROVIDE LOW IMPEDANCE AND SHALL HAVE THE SAME SHORT-TIME CURRENT-CARRYING CAPABILITY AS THE CONDUCTOR IT IS CONNECTED TO.
   f. ALL GRD ELECTRODES OR BONDING CONDUCTORS INSTALLED ALONE WITHIN A RACEWAY SHALL UTILIZE GRC WITH GROUNDING BUSHINGS AT EACH END. THIS GROUND CONDUCTOR SHALL LOOP THROUGH THE BUSHING LUG PRIOR TO TERMINATION. INSTALL GROUNDING JUMPERS TO GROUND BUS AS APPLICABLE.
4. ALL GRD CONDUCTORS SHALL BE CONTINUOUS AND UNBROKEN FROM EACH LOCATION INDICATED. INSTALL IN GRC WITH GRD BUSH ON EACH END.
5. GRD ELECTRODE SYSTEM SHALL BE INSTALLED IN ACCORDANCE WITH NEC.
6. MADE AND OTHER GRD SYSTEMS SHALL BE INSTALLED IN ACCORDANCE WITH NEC.
7. ALL EQUIP NOT SUPPLIED WITH A GRD LUG SHALL BE PROVIDED WITH A LUG SIZED FOR THE GRD CONNECTION INDICATED AND PROVIDED WITH A TAP CONNECTION TO BOND EQUIP ENCLOSURE.
8. GROUNDING CONNECTIONS SHALL BE UL LISTED AND AS FOLLOWS:
   BELOW GRADE: EXOTHERMIC WELDING
   ABOVE GRADE: EXOTHERMIC WELDING, PRESSURE CONNECTORS
   GRD RODS (ABOVE/BELOW GRADE): EXOTHERMIC WELDING
   GRD BUS: PRESSURE CONNECTORS
   EQUIP AND DEVICES: MECHANICAL LUG

DETAIL KEYED NOTES

1. 9.52mm (3/8") X 38.1mm (1 1/2") SILICON-BRONZE MACHINE BOLT & SILICON-BRONZE WASHER
2. 9.52mm (3/8") EXPANSION ANCHOR
3. 14.29mm (9/16"ø) HOLE IN BAR
4. DRILLED DOUBLE CONNECTOR HOLES
5. FLAT, TWO-HOLE CU CABLE CONNECTOR
   #6 TO #2 (DOUBLE LUGS)
   #1 TO #4/0 (SINGLE LUGS ONLY)
6. 50.8mm (2") WIDE, 6.35mm (1/4") DEEP COPPER BUS BAR.
7. LENGTH AS REQUIRED BY NUMBER OF CONDUCTOR CONNECTIONS OR AS SPECIFICALLY INDICATED ON DRAWINGS. PROVIDE INTERMEDIATE WALL SUPPORTS AS REQUIRED.
8. TYP CU GRD CONDUCTOR CONNECTION
9. DESCRIPTION TAG. STATE SIZE OF CONDUCTOR AND TO WHAT IT IS CONNECTED TO.
10. TYP GRD CONNECTION FROM BELOW. SEE APPLICABLE DETAILS FOR SLAB PENETRATIONS.
11. TYP GRD CONNECTION FROM ABOVE. SEE APPLICABLE DETAILS FOR RMC INSTALLATIONS.
12. INSULATED NON-CONDUCTIVE STANDOFF(S) – 2,700 VOLT CLASS.

US Army Corps of Engineers®

MARK	DESCRIPTION	DATE

DESIGNED BY: KLH
DRAWN BY: EWH, TEW
CHECKED BY: KLH
SUBMITTED BY: KLH
SIZE: ANSI D
ISSUE DATE: NOVEMBER 2017
SOLICITATION NO.: -
CONTRACT NO.: -
PROJECT NUMBER: M07EV17
FILE NAME: E501EV17.dwg

US ARMY CORPS OF ENGINEERS
MOBILE DISTRICT
MOBILE, ALABAMA

BASKERVILLE-DONOVAN, INC.
Innovative Infrastructure Solutions
1201 NORTH LAMAR BLVD, SUITE 300, OXFORD, MS 38655 (601) 234-0211
ENGINEERING & SURVEYING CERTIFICATE OF AUTHORIZATION: EB-00030
Pensacola • Panama City Beach • Destin/Miramar • Mobile • Brevard County • Tampa

PONCE, PUERTO RICO
PONCE MARINE UNIT - PIER & BOAT RAMP REPLACEMENT

TYPICAL GROUNDING DETAILS

SHEET ID
E-501

DETAIL NOTES

1. FURNISH AND INSTALL PEDESTALS AT LOCATIONS INDICATED, MOUNTED ON CAST-IN-PLACE CONCRETE BASE.
2. PROVIDE PVC CAST-IN-CONCRETE BOX BELOW EACH UNIT FOR FEEDER TERMINATION AND WIRING ACCESS.
   * COORDINATE WITH WATER LINE STUB-UP

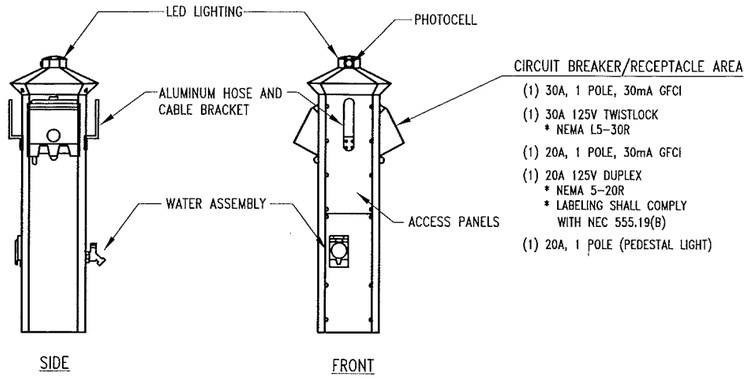

A / E502 DETAIL – MARINE POWER PEDESTAL

NOT TO SCALE

DETAIL NOTES

1. INSTALL PVC CONDUIT CAST-IN-PLACE ON PIER TO EACH DEVICE.
2. PROVIDE PVC CAST-IN-CONCRETE BOX BELOW EACH DEVICE FOR WIRING ACCESS.

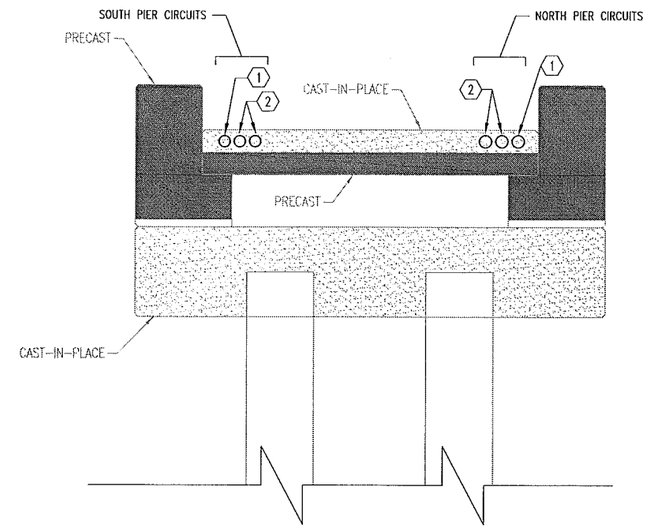

B / E502 DETAIL – PIER CONDUIT ROUTING

NOT TO SCALE

SHEET NOTES

1. ALL CONDUIT SYSTEMS SHALL BE INSTALLED PER SPECIFICATIONS AND AS DETAILED TO SUPPORT PIER INFRASTRUCTURE.
2. INSTALL CONDUIT SYSTEMS FROM PNL P THRU UTILITY TRENCH TO PIER. TURNS SHALL BE VIA CONDULET FITTINGS WITH GASKETED COVERS ON TOP FOR PULLING CONDUCTOR ACCESS.
   * OFF-SET CONDUIT AS REQUIRED
   * STAGGER FITTINGS AS REQUIRED
   * SEE DETAIL C/E502
3. INSTALL EXPANSION/DEFLECTION FITTINGS AT EACH PIER EXPANSION JOINT.
   * SEE SHEET E-201

KEYED NOTES

1. 3/4" CONDUIT FOR LIGHTING BOLLARDS
2. 1" CONDUIT FOR MARINE POWER PEDESTALS

DETAIL NOTES

1. INSTALL CONDUIT FITTINGS FOR CONDUIT TURNS IN UTILITY TRENCH TYPE "LL" OR "LR" AS REQUIRED FOR CONDUCTOR PULLS.
2. COVERS MUST BE ACCESSIBLE.

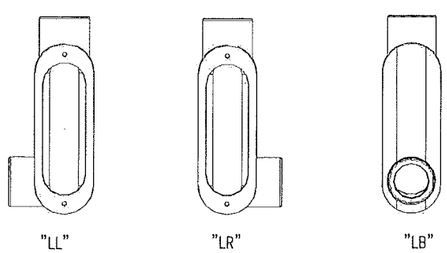

C / E502 DETAIL – TYPICAL CONDULET FITTINGS

NOT TO SCALE

US Army Corps of Engineers®

MARK	DESCRIPTION	DATE

ISSUE DATE: NOVEMBER 2017
SOLICITATION NO.:
CONTRACT NO.:
PROJECT NUMBER: M01TEV17
DESIGNED BY: KLH
DRAWN BY: EWH - TEW
CHECKED BY: KLH
SUBMITTED BY: KLH
FILE NAME: ES02EV17.dwg
SIZE: ANSI D

US ARMY CORPS OF ENGINEERS
MOBILE DISTRICT
MOBILE, ALABAMA

BASKERVILLE-DONOVAN, INC.
INTEGRATIVE INFRASTRUCTURE SOLUTIONS
1201 WATERMARK DRIVE, SUITE 300 (32502-5976)
P.O. BOX 12746 (32591-2746)
TEL: (850) 432-6700
FAX: (850) 432-6700
DUNS/CAGE Code: 6BUN5 / 6BUN2
Business Size: SB-SDVOSB
Pensacola · Panama City Beach · Tallahassee · Mobile · Brevard County · Tampa

PONCE, PUERTO RICO
PONCE MARINE UNIT - PIER & BOAT RAMP REPLACEMENT

TYPICAL ELECTRICAL DETAILS

SHEET ID
E-502

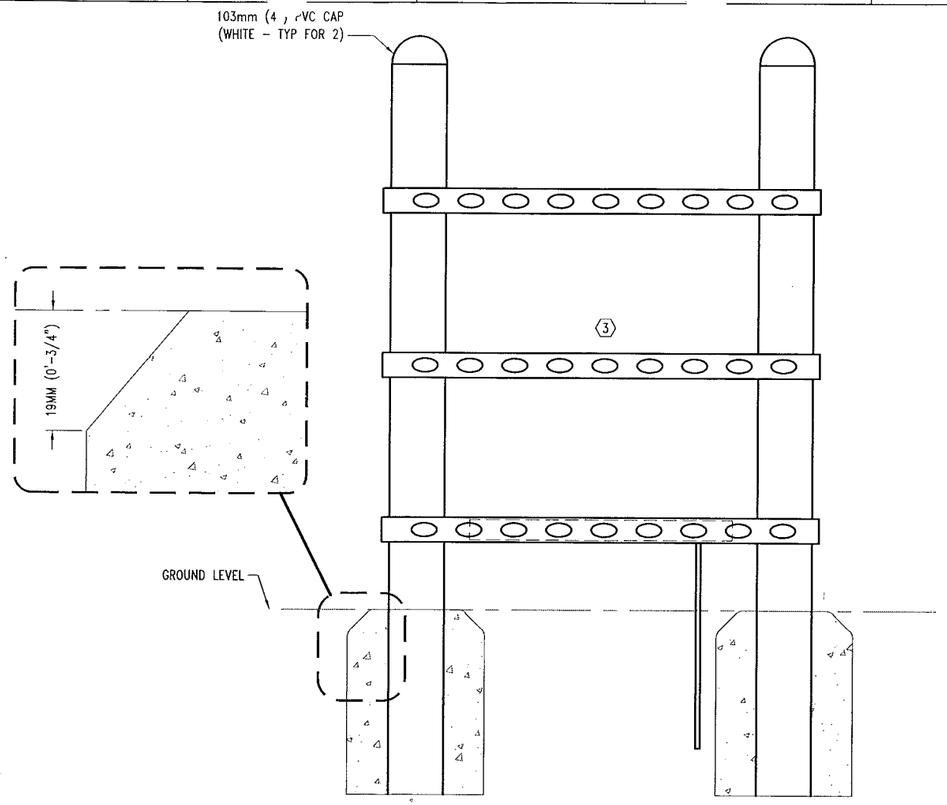

FRONT VIEW

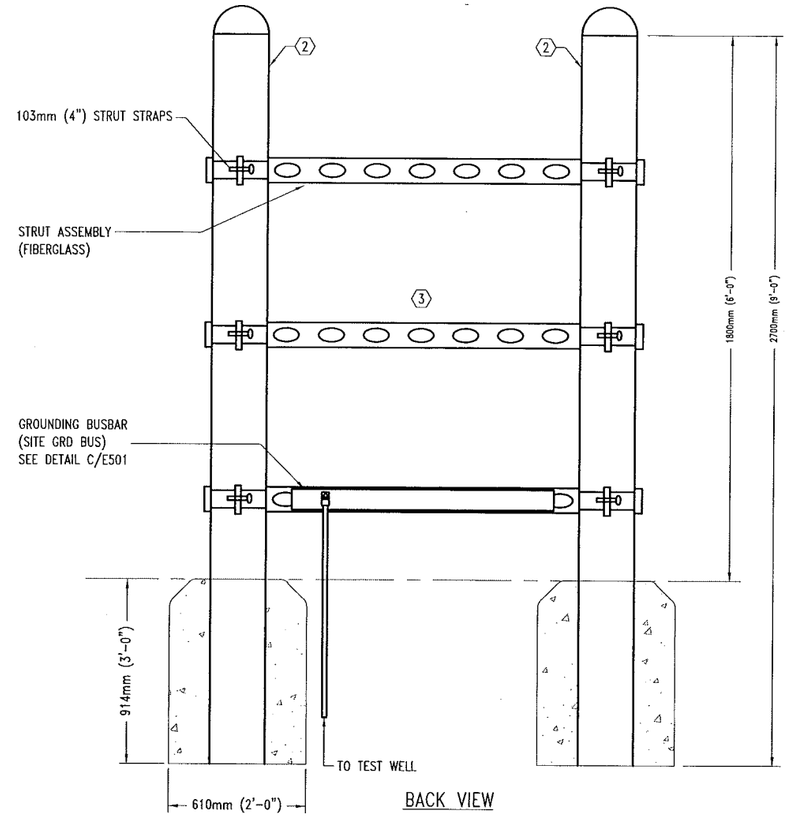

BACK VIEW

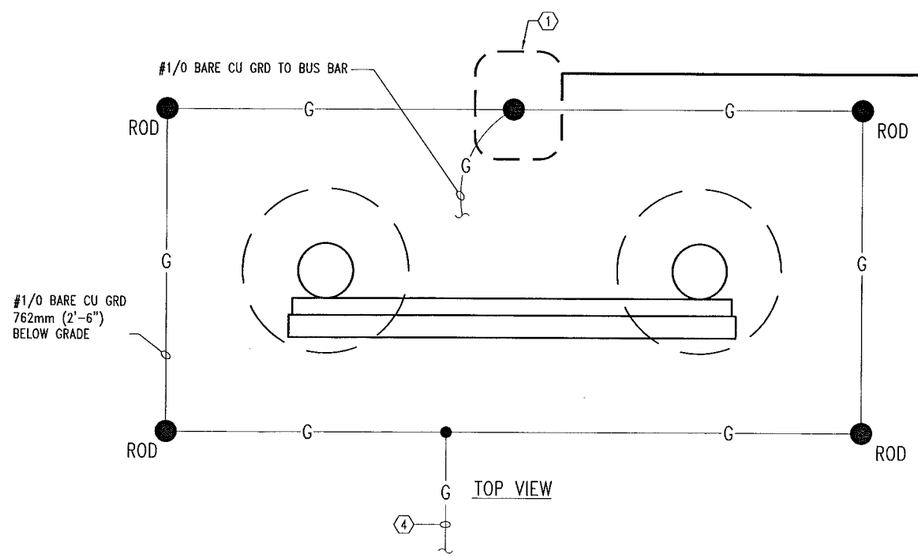

TOP VIEW

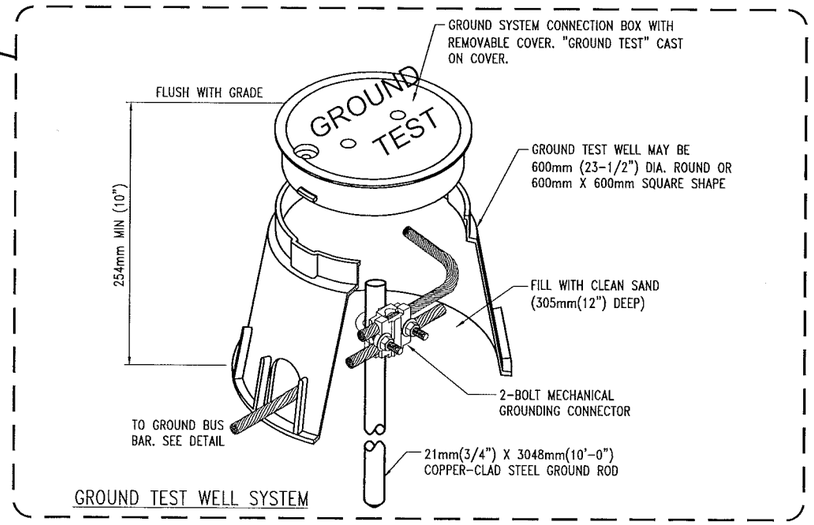

GROUND TEST WELL SYSTEM

SHEET NOTES

1. WIDTH OF INSTALLATION IS DEPENDENT ON MOUNTED EQUIPMENT PLUS 25%
   * PANEL/TRANSFORMER
   * RECEPTACLE
   * LIGHTING CONTROLS
   * LUMINAIRE
   * GROUNDING PROVISIONS

KEYED NOTES

1. INSTALL GROUND TEST WELL.
2. 103mm (4") PLASTIC-COATED RIGID STEEL (GRS)
3. INSTALL EQUIPMENT AS NOTED IN SINGLE LINE DIAGRAM. ADD ADDITIONAL STRUT AND/OR ADJUST ACCORDINGLY.
4. UTILITY TRENCH GROUND CONDUCTOR
   * #1/0 CU GRD
   * SEE PIER GROUNDING PLAN

DETAIL - TYPICAL BACKBOARD STRUCTURE

A / E503

NO SCALE

US Army Corps of Engineers®

MARK	DESCRIPTION	DATE

DESIGNED BY: KLH
DRAWN BY: EWT/TEW
CHECKED BY: KLH
SUBMITTED BY: KLH
SIZE: ANSI D
ISSUE DATE: NOVEMBER 2017
SOLICITATION NO.:
CONTRACT NO.:
PROJECT NUMBER: M017EV17
FILE NAME: E503EV17.dwg

US ARMY CORPS OF ENGINEERS
MOBILE DISTRICT
MOBILE, ALABAMA

BASKERVILLE-DONOVAN, INC.
A Member of the AECOM Team
1201 MONTLAIMAR DRIVE, SUITE 810, MOBILE, AL 36609-7513 | 251.343.0371
ENGINEERING BUSINESS ID-000606
Pensacola • Panama City Beach • Fayetteville • Milton • Brevard County • Tampa

PONCE, PUERTO RICO
PONCE MARINE UNIT - PIER & BOAT RAMP REPLACEMENT

TYPICAL BACKBOARD STRUCTURE

SHEET ID
E-503

TRANSFORMER SCHEDULE

MARK	KVA	PRI VOLTAGE	SECONDARY VOLTAGE	Z	MTG	NOTES
TX-P1	15	240V, 1PH	480V, 1PH	–	WALL	STEP-UP
TX-P2	15	480V, 1PH	120/240V, 1PH	–	WALL	STEP-DOWN

TRANSFORMER INSTALLATION NOTES

1. SIZE ALL SUPPORTS. ANCHOR SYSTEMS, BOLTS, ETC., AS REQUIRED FOR A SECURE INSTALLATION IN ACCORDANCE WITH THE SPECIFICATIONS.
2. EACH TRANSFORMER SHALL BE PROVIDED WITH VIBRATION ISOLATION. PROVIDE ADDITIONAL SPECIAL VIBRATION OR ISOLATION PADS (FLEXIBLE MOUNTS OR VIBRATION DAMPENERS WHEN INSTALLED TO A WALL)
3. SEE TRANSFORMER SCHEDULE FOR MOUNTING REQUIREMENTS.
4. ALL WALL UNITS SHALL BE PROVIDED WITH ACCESSORIES FROM THE MANUFACTURER SPECIFICALLY FOR THAT PURPOSE.

IN EACH PHASE CONNECT TO TAPS	
PRIMARY VOLTS	2-2.5% FCAN 4-2.5% FCBN
504	1-8
492	1-7
480	2-7
460	2-6

TAP SETTING NOTE:
THE CONTRACTOR SHALL SET TAPS AT THE PROPER SETTING TO COMPENSATE FOR VOLTAGE VARIATIONS DUE TO LOAD CONDITIONS.

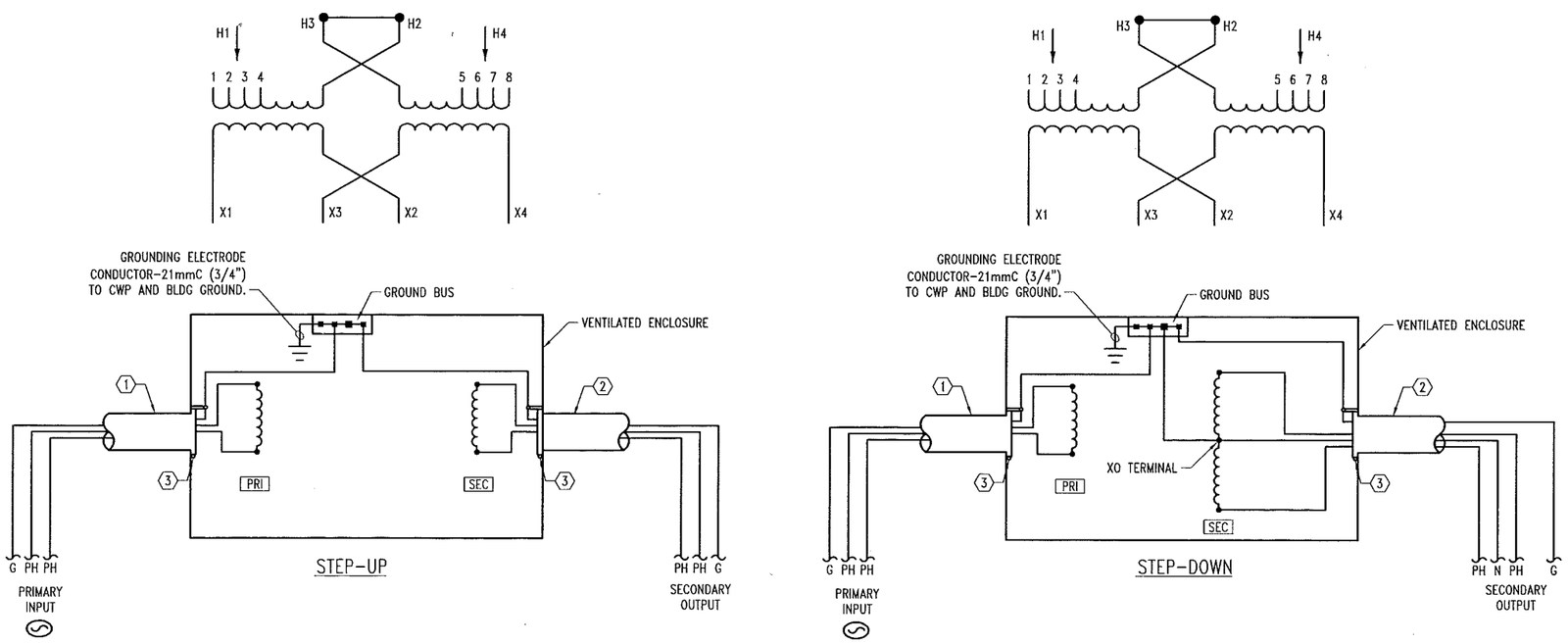

A
E504

DETAIL – TYPICAL SINGLE-PHASE DRY TYPE TRANSFORMER CONNECTIONS

NO SCALE

SHEET NOTES

1. DRY-TYPE TRANSFORMERS SHALL CONSIST OF BUT NOT BE LIMITED TO THE FOLLOWING:
   a. ENCAPSULATED & SEALED ENCLOSURE
      * NEMA 4X
   b. PRIMARY SECTION
   c. SECONDARY SECTION
   d. OVERCURRENT PROTECTION
2. INSTALLATION SHALL COMPLY WITH THE REQUIREMENTS OF THE NATIONAL ELECTRICAL CODE (NEC) AND THE NATIONAL ELECTRICAL SAFETY CODE (NESC).
3. ALL CONDUCTIVE PARTS OF EQUIPMENT, ENCLOSURES, FRAMES, ETC., SHALL BE GROUNDED.
4. ALL CLEARANCES SHALL BE MAINTAINED PER NESC AND NEC. ALL PARTS, DEVICES, EQUIPMENT, ETC. WHICH REQUIRE MAINTENANCE, ADJUSTMENT, OPERATION OR EXAMINATION DURING NORMAL NETWORK OPERATION SHALL BE ARRANGED SO AS TO BE ACCESSIBLE BY THE PROVISION OF ADEQUATE WORKING SPACES, WORKING FACILITIES AND CLEARANCES. UNLESS NOTED OTHERWISE ALL CLEARANCES ARE MEASURED FROM SURFACE TO SURFACE.
5. ALL DIMENSIONS INDICATED IN THESE DOCUMENTS ARE FOR REFERENCE AND COORDINATION PURPOSES ONLY. THE CONTRACTOR IS RESPONSIBLE FOR VERIFYING ALL DIMENSIONS IN THE FIELD.
6. TRANSFORMERS SHALL BE INSTALLED IN ACCORDANCE WITH THE MANUFACTURER'S INSTRUCTIONS AND APPLICABLE DETAILS, ACCESSIBLE WITH MECHANICAL PROTECTION, NEMA 4X SEALED ENCLOSURES AND WITHIN A SPACE TO PROVIDE VENTILATION TO DISPOSE OF THE TRANSFORMER FULL LOAD LOSSES. EACH TRANSFORMER SHALL CONTAIN A NAMEPLATE IN ACCORDANCE WITH NEC AND THE CONTRACTOR SHALL INSURE THAT ALL SPECIAL PRECAUTIONS ARE MET SUCH AS PROPER CLEARANCES FOR VENTILATION, OVERCURRENT PROTECTION, ETC.

KEYED NOTES

1. LIQUID-TIGHT FLEXIBLE METAL CONDUIT AND FITTINGS PRIMARY CONDUIT SYSTEM
2. LIQUID-TIGHT FLEXIBLE METAL CONDUIT AND FITTINGS SECONDARY CONDUIT SYSTEM
3. GROUNDING BUSHING

US Army Corps of Engineers®

MARK	DESCRIPTION	DATE

DESIGNED BY: KLH
DRAWN BY: EWH - TEW
CHECKED BY: KLH
SUBMITTED BY: KLH
SIZE: ANSI D
ISSUE DATE: NOVEMBER 2017
SOLICITATION NO.: -
CONTRACT NO.: -
PROJECT NUMBER: M017EV17
FILE NAME: E504EV17.dwg

US ARMY CORPS OF ENGINEERS
MOBILE DISTRICT
MOBILE, ALABAMA

BASKERVILLE-DONOVAN, INC.
Innovative Infrastructure Solutions
1201 Waterway Square Blvd., Suite 400, Corpus Christi, TX 78404 (361) 882-6611
ENGINEERING SERVICES FIRM F-2578
Pensacola • Panama City Beach • Mandeville • Metairie • Stevens County • Tampa

PONCE, PUERTO RICO
PONCE MARINE UNIT - PIER & BOAT RAMP REPLACEMENT

DRY TYPE TRANSFORMER
DETAILS AND SCHEDULES

SHEET ID
E-504

LUMINAIRE SCHEDULE

LUMINAIRE MARK	USACE STANDARD DETAILS	LUMINAIRE						MTG	LUMINAIRE VOLTAGE	LUMINAIRE CRITERIA					NOTE NO
										ZONAL CAVITY METHOD ASSUME RCR = 1				SPACING TO MTG HGT RATIO	
										EFFECTIVE REFLECTANCE			CU		
	TYPE	LUMEN OUTPUT	WATTAGE	COLOR TEMP	NUMBER OF DRIVERS	DRIVE CURRENT	NUMBER OF LED BOARDS			CLG	WALL	FLOOR			
MARK	TYPE	OUTPUT	WATT	TEMP	TYPE	CURRENT	BOARDS	MTG	VOLT	CLG	WALL	FLOOR	CU	SPACING	NOTE
BD	XL-12	350	16W	LWA	1	450mA	--	CB	120	--	--	--	--	--	3,5,6
WP	XL-17	1,290	14W	5,000	1	--	--	W	120	--	--	--	--	--	3

LUMINAIRE SCHEDULE NOTES

1. THE CONTRACTOR SHALL SUBMIT, FURNISH AND INSTALL A LUMINAIRE WITH SIMILAR LUMINAIRE CRITERIA LISTED IN THE SCHEDULE. THE DESIGN AND LAYOUT PRESENTED IS BASED UPON THE INFORMATION CONTAINED IN THE COLUMNS UNDER "LUMINAIRE CRITERIA" AND ANY DEVIATION MAY REQUIRE THE CONTRACTOR TO FURNISH ADDITIONAL LUMINAIRES BASED ON NEW LIGHTING CALCULATIONS TO MEET THE DESIGN INTENT.
2. UNIT SHALL CONTAIN UL DAMP LOCATION LABEL.
3. UNIT SHALL CONTAIN UL WET LOCATION LABEL.
4. UNIT SHALL BE CONNECTED AHEAD OF LOCAL SWITCHING.
5. LUMINAIRE SHALL BE EQUIPPED WITH LIMITED WAVELENGTH AMBER LEDs.
6. LUMINAIRE SHALL HAVE ASYMMETRIC DISTRIBUTION PATTERN.

LUMINAIRE NOTES

1. LUMINAIRE AND LUMINAIRE INSTALLATION SHALL BE IN ACCORDANCE WITH NFPA 70, ARTICLE 410. ALL LUMINAIRES SHALL BE UL LISTED AND INSTALLED IN ACCORDANCE WITH THE UL LISTING "FIXTURE MARKING GUIDE" AND SUPPORTED BY MEANS DESIGNED FOR THAT LISTED INSTALLATION. ALL CLEARANCES REQUIRED BY CODE SHALL BE MAINTAINED. LUMINAIRES INSTALLED IN UNUSUAL CONDITIONS SUCH AS DAMP, WET, ETC., LOCATIONS SHALL BE MARKED AND LABELED FOR THE PURPOSE.
2. EACH LUMINAIRE SHALL BE FURNISHED COMPLETE WITH THE PROPER DRIVER, SURGE SUPPRESSION, DIMMING CONTROLS, WIRING COMPONENTS, SUPPORTING FRAMES AND/OR DEVICES, ETC., FOR A COMPLETE INSTALLATION SUITABLE WITH THE AMBIENT CONDITIONS ENCOUNTERED. ALL DEVICES, COMPONENTS, FITTINGS, SUPPORTS, ETC., SHALL BE COORDINATED TO PROVIDE A COMPLETE UL LISTED INSTALLATION.
3. EACH LUMINAIRE SHALL BE FURNISHED WITH GROUNDING PROVISIONS AND BE GROUNDED TO THE GROUNDING PROVISIONS OF THE WIRING SYSTEM.
4. LUMINAIRES SHALL NOT BE INSTALLED IN CONTACT WITH COMBUSTIBLE MATERIALS. ADEQUATE SPACE FOR AIR CIRCULATION AND CODE COMPLIANCE SHALL BE PROVIDED AS A MINIMUM. FURNISH SPACERS, WASHERS, SUPPORT DEVICES, ETC., AS REQUIRED TO MAINTAIN PROPER CLEARANCES. LUMINAIRES SHALL BE CONSTRUCTED, INSTALLED AND EQUIPPED SUCH THAT ADJACENT MATERIAL WILL NOT BE SUBJECTED TO TEMPERATURES IN EXCESS OF 90°C (194°F).
5. OUTLET BOXES, CONDUCTORS, SPLICES AND TERMINATIONS SHALL BE ACCESSIBLE. ONLY CONDUCTORS RATED FOR THE ENVIRONMENTAL CONDITIONS, CURRENT, VOLTAGE AND TEMPERATURES ENCOUNTERED SHALL BE USED.
6. ALL ADJUSTABLE LUMINAIRES SHALL BE ADJUSTED FOR FINAL APPROVAL DURING NON-DAYLIGHT HOURS.
7. LED MODULE/DRIVER CONTROL COMBINATIONS SHALL BE COMPATIBLE IN ACCORDANCE WITH MANUFACTURER'S TESTING DATA AND RECOMMENDATIONS.
   * DRIVERS SHALL MEET 47 CFR, PART 18, FOR RFI EMISSIONS.
   * DRIVERS SHALL NOT EXCEED 20% TOTAL HARMONIC DISTORTION (THD)
   * DRIVERS SHALL BE COMPATIBLE WITH DIMMING AND SWITCHING SCHEMES.
8. LED LUMINAIRE'S LUMEN MAINTENANCE SHALL MEET OR EXCEED THE LATEST VERSION OF IES LM-80 TESTING STANDARDS. LUMINAIRE PHOTOMETRICS SHALL COMPLY WITH THE LATEST VERSION OF IESNA LM-79 TESTING CRITERIA.
9. ALL LUMINAIRES SHALL COMPLY WITH MINIMUM ENERGY EFFICIENCY REQUIREMENTS OF APPLICABLE CODES.
10. LED MODULES/DRIVERS SHALL BE ACCESSIBLE AND UPGRADABLE.
11. LUMINAIRES SHALL HAVE INTEGRAL SURGE SUPPRESSION WHEN APPLICABLE.

LUMINAIRE SCHEDULE AND LAMP/BALLAST CHART - KEY LEGEND & TERMINOLOGY

LAMP TYPES

LED	LIGHT EMITTING DIODE
LWA	LIMITED WAVELENGTH AMBER

LAMP DESIGNATION

A	A - LAMP
FL	FLOOD
MFL	MEDIUM FLOOD
NFL	NARROW FLOOD
WFL	WIDE FLOOD
HO	HIGH OUTPUT
IF	INSIDE FROSTED
MR	MIRRORED REFLECTOR
PAR	PARABOLIC ALUMINUM REFLECTOR
SP	SPOT
VHO	VERY HIGH OUTPUT
W	WATT

LUMINAIRE MOUNTING

C	CEILING
CB	CONCRETE BASE
CH	CHAIN HANG
D	DESK
F	FLOOR
G	GRADE
P	PENDANT
PT	POST TOP
R	RECESS
RL	RECESS LAY - IN
RF	RECESS FLANGE
RW	RECESS WALL
S	SURFACE
SR	SEMI - RECESS
T	TRACK
U	UNIVERSAL
UC	UNDERCABINET
W	WALL

IES LIGHTING TERMS

CCT	COLOR CORRECTED TEMPERATURE
CRI	COLOR RENDERING INDEX
CU	COEFFICIENT OF UTILIZATION
CDC	CANDLE POWER DISTRIBUTION CURVE
CBCP	CENTER BEAM CANDLE POWER
FC	FOOTCANDLES
K	DEGREES KELVIN
LUX	METRIC FOOTCANDLE (FC X 10.8)
RCR	ROOM CAVITY RATIO
LUMENS	MEASURED OUTPUT OF LAMP, LUMINAIRE, OR BOTH
LUMINAIRE	COMPLETE LIGHTING UNIT, INCLUDING LAMP, REFLECTOR, AND HOUSING

LED SPECIFICATIONS

LED LUMINAIRES SHALL BE INSTALLED IN ACCORDANCE WITH THE MANUFACTURER'S INSTRUCTIONS AND RATINGS. LUMINAIRE MANUFACTUER SHALL HAVE BEEN ENGAGED IN MANUFACTURING LUMINAIRES AND ACCESSORIES FOR 10 YEARS PRIOR TO BID OPENING. LUMINAIRES SHALL HAVE BEEN IN SATISFACTORY COMMERCIAL OR INDUSTRIAL USE FOR TWO YEARS PRIOR TO BID OPENING. ALL LUMINAIRES SHALL MEET ANY NATIONAL OR LOCAL REGULATIONS.

TYPE	COLOR TEMP	LUMEN OUTPUT	CRI	LUMENS PER WATT	LUMEN MAINTENANCE PERCENTAGE	LUMEN MAINTENANCE HOUR INTERVAL
BOLLARDS	LWA	350	70	22	95	100,000
EXTERIOR WALL PACK	5,000K	1,300	80	92	75	100,000

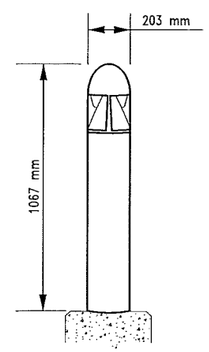

LUMINAIRE REQUIREMENTS:

1. HOUSING - EXTRUDED DIE-CAST ALUMINUM SHAFT, REFLECTOR & TOP CAP. ALL EXPOSED HARDWARE SHALL BE STAINLESS STEEL.
2. FINISH - MULTI-STAGE PRE-TREATMENT, FINISHED WITH BAKED-ON POLYESTER POWDER COAT. FINISH SHALL PASS 2500 HOUR SALT SPRAY TEST PER ASTM B117.
3. DRIVER - TYPE C - CLASS 1, CONSTANT CURRENT, ELECTRONIC DRIVER FOR HIGH EFFICIENCY LED LIGHT SOURCE. ELECTRICAL COMPONENTS SHALL BE SERVICEABLE AND UPGRADABLE. ALUMINUM HEAT SINKS SHALL MAXIMIZE HEAT DISSIPATION.
4. OPTICAL ASSEMBLY - TYPE C - DIRECTIONAL FULL CUTOFF LED ASSEMBLIES FOR MAXIMUM BEAM ANGLE PROJECTION THROUGH OPENINGS IN LUMINAIRE BODY. PROVIDE ASYMMETRIC DISTRIBUTION AS INDICATED WITH 0% UPLIGHT.
5. LIGHT SOURCE - LED SOURCE. AMBER LIMITED WAVE LENGTH.
6. CERTIFICATION - UL AND/OR ETL LISTED FOR WET LOCATION AND RoHS COMPLIANT.
7. OPTIONS - CLEAR LENS, HOUSE SIDE SHIELD FOR 180 DEGREE COVERAGE.

LED BOLLARD

NO SCALE TYPE 'BD'

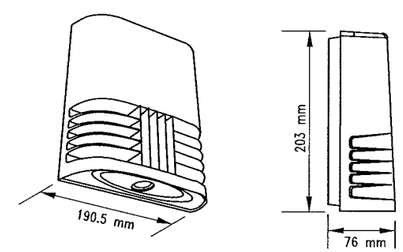

LUMINAIRE REQUIREMENTS:

1. HOUSING - HEAVY-DUTY DIE-CAST ALUMINUM WITH INTEGRAL PASSIVE COOLING HEAT SINKS. HEAT SINK SHALL BE INCORPORATED DIRECTLY INTO HOUSING OR DRIVER COMPARTMENT TO ENSURE MAXIMUM HEAT TRANSFER AND DISSIPATION. HOUSING SHALL BE SEALED AGAINST MOISTURE AND ENVIRONMENTAL CONTAMINANTS.
2. FINISH - MULTI-STAGE PRE-TREATMENT, FINISHED WITH TEXTURED BAKED-ON POLYESTER POWDER COAT. FINISH SHALL PASS 2500 HOUR SALT SPRAY TEST PER ASTM B117. STANDARD FINISH IS DARK BRONZE.
3. POWER SUPPLY/LED DRIVER - CLASS 1 DRIVER SHALL OPERATE AT 120 VOLTS, 60 HZ; ELECTRONIC DRIVER SHALL HAVE A POWER FACTOR GREATER THAN 0.9 AND THD LESS THAN 20% AT FULL LOAD.
4. LED OPTICAL ASSEMBLY - HIGH PERFORMANCE LEDS BEHIND CLEAR GLASS LENS PRODUCING NEMA TYPE III DISTRIBUTION. MINIMUM COLOR RENDERING INDEX (CRI) SHALL BE 70 FOR CORRELATED COLOR TEMPERATURE (CCT) OF 5000 DEGREES K. FULL CUTOFF WITH ZERO UPLIGHT.
5. CERTIFICATION - UL AND/OR ETL LISTED WET LOCATIONS AS INDICATED, AND RoHS COMPLIANT.

LED WALL LUMINAIRE

NO SCALE TYPE 'WP'

US Army Corps of Engineers®

MARK	DESCRIPTION	DATE

ISSUE DATE: NOVEMBER 2017
SOLICITATION NO.: -
CONTRACT NO.: -
PROJECT NUMBER: M017EV17
FILE NAME: E601EV17.dwg

DESIGNED BY: KLH
DRAWN BY: EWH, TEW
CHECKED BY: KLH
SUBMITTED BY: KLH
SIZE: ANSI D

US ARMY CORPS OF ENGINEERS
MOBILE DISTRICT
MOBILE, ALABAMA

BASKERVILLE-DONOVAN, INC.
Innovative Infrastructure Solutions
1001 Washington Street, Suite 400, Gulfport, MS 39501 (228) 863-8051
ENGINEERING BUSINESS #532 EB-0000242
Pensacola - Panama City Beach - Tallahassee - Mobile - Brevard County - Tampa

PONCE, PUERTO RICO
PONCE MARINE UNIT - PIER & BOAT RAMP REPLACEMENT

LUMINAIRE SCHEDULE & NOTES

SHEET ID
E-601

PANELBOARD SCHEDULE

PANEL: P — MAIN: 60A MCB — SERVICE: 240/120V 1PHASE 3 WIRE
TYPE: BOCB — AIC: 10,000 AMPS — MOUNTED: SURFACE NEMA 4X

LOAD DIRECTORY	VOLT AMPERE LOAD		CIRCUIT BREAKERS						VOLT AMPERE LOAD		LOAD DIRECTORY
	PHASE A	PHASE B	TRIP	POLE	CKT#	CKT#	POLE	TRIP	PHASE A	PHASE B	
LIGHTING	140		20	1	1	2	1	50	3000		POWER PEDISTAL A
				1G	3	4	1G				
BUSS SPACE					5	6					BUSS SPACE
LIGHTING		120	20	1	7	8	1	50		3000	POWER PEDISTAL B
				1G	9	10	1G				
BUSS SPACE					11	12					BUSS SPACE
BACK BOARD DEVICES	195		20	1	13	14	1	50	3000		POWER PEDISTAL C
CCTV CAMERA		50	20	1	15	16	1G				
BUSS SPACE					17	18					BUSS SPACE
BUSS SPACE					19	20	1	50		3000	POWER PEDISTAL D
SPD			40		21	22	1G				
				2	23	24					BUSS SPACE
SUBTOTAL	335	170							6000	6000	

CONNECTED LOAD PHASE A 6,335 VA
CONNECTED LOAD PHASE B 6,170 VA
TOTAL CONNECTED LOAD 12,505 VA = 52 AMPS

PANELBOARD NOTES:
1. 1G INDICATES SINGLE POLE GFCI DEVICE
2. NEMA 4X ENCLOSURE PANEL WITH FUNGAS-PROOFING

DIMENSION BLOCK		
REF	SI	ENGLISH
A	1m	3'-6"
B	.38m	1'-3"
C	2.0m	6'-7"
D	1.82m	6'-0"

PANELBOARD SCHEDULE & DETAIL – KEY LEGEND

MOUNTING
- F FLUSH
- FS FREE STANDING
- S SURFACE

ELECTRICAL
- A AMPERE
- PH PHASE
- V VOLTAGE
- W WIRE
- Y WYE
- △ DELTA

MAINS & CIRCUIT BREAKERS
- GF GROUND FAULT CIRCUIT INTERRUPTER
- L LOCKHANDLE TYPE
- MCB MAIN CIRCUIT BREAKER
- MLO MAIN LUGS ONLY
- SD SWITCH DUTY
- ST SHUNT TRIP TYPE

MISC. TERMS
- AIC AMPERE INTERRUPTING CAPACITY
- BCB BOLT-ON CIRCUIT BREAKER
- SCCR SHORT CIRCUIT CURRENT RATING
- FUS FUSIBLE SWITCH
- LC LOAD CENTER
- SE SERVICE ENTRANCE

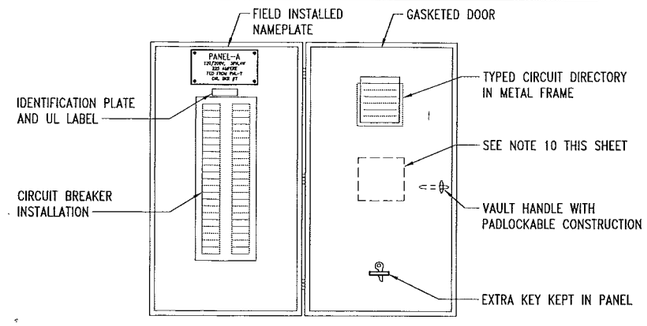

TYPICAL FRONT VIEW – NEMA 4X

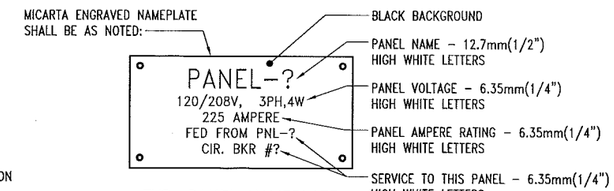

TYP. PANEL NAMEPLATE
(SEE NOTE 13)

PANELBOARD SCHEDULE AND DETAIL NOTES

1. PANELBOARD & PANELBOARD INSTALLATION TO BE IN ACCORDANCE WITH NFPA 70, CURRENT NEC. ALL PANELBOARDS SHALL BE UL LISTED AND INSTALLED IN ACCORDANCE WITH THIS LISTING AND FULLY SUPPORTED BY MEANS DESIGNED FOR THAT LISTED INSTALLATION. ALL CLEARANCES REQUIRED BY CODE SHALL BE MAINTAINED AS A MINIMUM.
2. EACH PANELBOARD SHALL BE FURNISHED COMPLETE WITH THE PROPERLY SIZED CAN, INTERNAL HARDWARE, DEVICES, COMPONENTS, SUPPORTING STRUCTURES, ETC., FOR A COMPLETE INSTALLATION TO PROVIDE THE DESIGNED PERFORMANCE UNDER THE AMBIENT CONDITIONS ENCOUNTERED. ALL DEVICES, COMPONENTS, FITTINGS, SUPPORTS, ETC., SHALL BE COORDINATED TO PROVIDE A COMPLETE UL LISTED INSTALLATION. ALL DEVICES INSTALLED SHALL HAVE AN INTERRUPTING RATING GREATER THAN OR EQUAL TO THE SPECIFIED SCCR.
3. EACH PANELBOARD SHALL BE FURNISHED WITH A GROUND BAR BONDED TO THE PANEL ENCLOSURE. THIS GROUND BUS SHALL BE UTILIZED TO BOND ALL GROUNDING PROVISIONS IN ORDER TO ESTABLISH EQUAL POTENTIAL TO ALL GROUNDED COMPONENTS OF THE POWER SYSTEM NETWORK.
4. PANELBOARD CANS SHALL BE RIGID AND CONTAIN KNOCK-OUT PROVISIONS TO FACILITATE THE TERMINATION OF THE NUMBER AND SIZE OF CONDUIT SYSTEMS REQUIRED.
5. THE TERMINATION POINT OF THE FEEDER SERVING EACH ASSEMBLY SHALL BE AT THE NEAREST POINT OF FEEDER ENTRY TO MINIMIZE CONDUCTOR FILL IN THE CAN. COORDINATE TOP/BOTTOM FEED PANELBOARD PROVISIONS WITH EACH FEEDER INSTALLATION.
6. PROVIDE THE PROPERLY SIZED CONDUCTOR TERMINATION POINTS OR LUGS (MULTIPLE LUGS WHEN PARALLEL FEEDERS ARE USED) FOR THE NUMBER AND SIZE CIRCUITS INDICATED.
7. CONDUCTORS, SPLICES AND TERMINATIONS SHALL BE ACCESSIBLE. ONLY CONDUCTORS RATED AND SIZED FOR THE TEMPERATURE OF THE TERMINATION SHALL BE USED.
8. PANELBOARDS SHALL NOT BE INSTALLED IN CONTACT WITH COMBUSTIBLE MATERIALS. ADEQUATE SPACE FOR AIR CIRCULATION AND CODE COMPLIANCE SHALL BE PROVIDED AS A MINIMUM. FURNISH SPACERS, WASHERS, SUPPORT DEVICES, ETC., AS REQUIRED TO MAINTAIN PROPER CLEARANCES. EXTERIOR PANELS SHALL CONTAIN AT LEAST 15mm(0.6") OF AIR SPACE BETWEEN THE CABINET AND SURFACE.
9. EACH PANELBOARD SHALL BE FURNISHED WITH THE FOLLOWING ACCESSORIES:
   * DOOR – IN – DOOR TRIM
   * TWO KEYS
   * ONE-HALF PINT CONTAINER OF TOUCH-UP PAINT FOR EACH SURFACE MOUNTED PANELBOARD
   * METAL DIRECTORY FRAME WITH TYPED DIRECTORY
   * FILLER PLATES FOR KNOCK-OUT SPACES FOR UNUSED OPENINGS
10. PROVIDE ARC-FLASH HAZARD WARNING SIGNS PER NFPA 70 & 70E.
    * REFER TO ANSI Z535.4
    * LOCATE ON FRONT OF DOOR.
11. EACH PANELBOARD NOTED FOR FUNGAS-PROOFING SHALL CONTAIN A PERMANENT FUNGICIDE AL TREATMENT FOR INTERIOR AND COMPONENTS INCLUDING CIRCUIT BREAKERS.

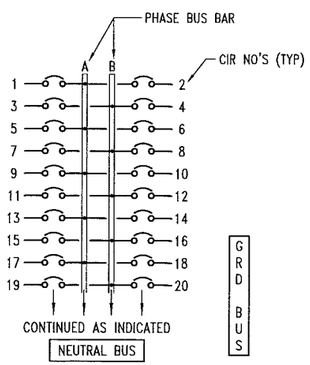

TYPICAL PANELBOARD 1-PHASE CIRCUITING DIAGRAM

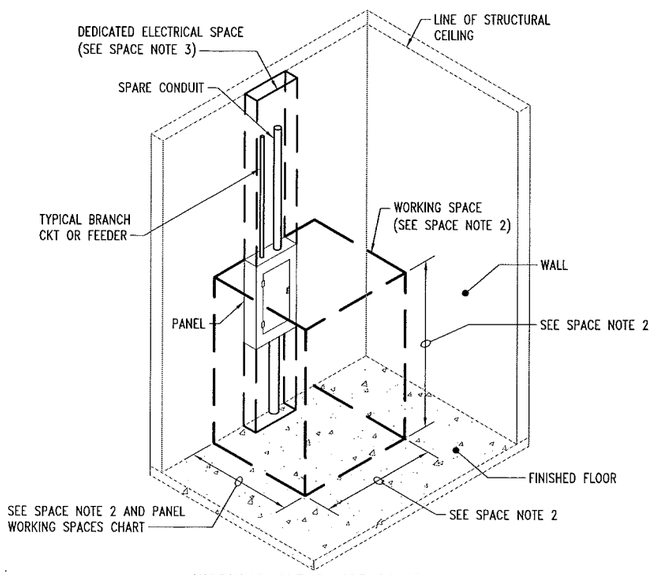

WORKING CLEARANCE DIAGRAM

PANEL WORKING SPACES

NOMINAL VOLTAGE TO GROUND	MINIMUM CLEAR DISTANCE		
	CONDITION 1	CONDITION 2	CONDITION 3
0–150	914mm (3')	914mm (3')	914mm (3')
151–600	914mm (3')	1.07m (3'-6")	1.22m (4')

NOTE:
WHERE THE CONDITIONS ARE AS FOLLOWS:
- CONDITION 1 – EXPOSED LIVE PARTS ON ONE SIDE OF THE WORKING SPACE AND NO LIVE OR GROUNDED PARTS ON THE OTHER SIDE OF THE WORKING SPACE, OR EXPOSED LIVE PARTS ON BOTH SIDES OF THE WORKING SPACE THAT ARE EFFECTIVELY GUARDED BY INSULATING MATERIALS.
- CONDITION 2 – EXPOSED LIVE PARTS ON ONE SIDE OF THE WORKING SPACE AND GROUNDED PARTS ON THE OTHER SIDE OF THE WORKING SPACE. CONCRETE, BRICK, OR TILE WALLS SHALL BE CONSIDERED AS GROUNDED.
- CONDITION 3 – EXPOSED LIVE PARTS ON BOTH SIDES OF THE WORKING SPACE.

SPACE NOTES:

1. DIMENSIONS SHOWN ARE MINIMUM.
2. WORKING SPACE IS DEFINED AS THE SPACE IN FRONT OF THE PANEL FOR EXAMINATION, ADJUSTMENTS, SERVICING AND/OR MAINTENANCE WHILE ENERGIZED. IN ALL CASES WORK SPACES SHALL PERMIT AT LEAST A 90 DEG. OPENING OF EQUIPMENT DOORS OR HINGED PANELS.
   - WIDTH: 762mm(30") OR WIDTH OF EQUIPMENT (WHICHEVER IS GREATER)
   - HEIGHT: 2.0m(6'-6") FROM FLOOR OR HEIGHT OF EQUIPMENT. (WHICHEVER IS GREATER)
   - DEPTH: DEPENDS ON CONDITIONS OUTLINED IN PANEL WORKING SPACES CHART.
3. DEDICATED ELECTRICAL SPACE IS DEFINED AS THE SPACE EQUAL TO THE WIDTH AND DEPTH OF THE EQUIPMENT, EXTENDING FROM FLOOR TO A HEIGHT OF 1.8m(6'-0") ABOVE THE EQUIPMENT OR TO THE STRUCTURAL CEILING. (WHICHEVER IS LOWER)
4. SEE NFPA 70, CURRENT NEC.

A
E701

DETAIL – TYPICAL PANELBOARD PROVISIONS

NO SCALE

TYPICAL PANELBOARD DETAILS AND REQUIREMENTS

NO SCALE

US Army Corps of Engineers®

MARK	DESCRIPTION	DATE

DESIGNED BY: KLH
DRAWN BY: EWH, TEW
CHECKED BY: KLH
SUBMITTED BY: KLH
SIZE: ANSI D
FILE NAME: E701EV17.dwg
ISSUE DATE: NOVEMBER 2017
SOLICITATION NO.: -
CONTRACT NO.: -
PROJECT NUMBER: M017EV17

US ARMY CORPS OF ENGINEERS
MOBILE DISTRICT
MOBILE, ALABAMA

BASKERVILLE-DONOVAN, INC.
Innovative Infrastructure Solutions
207 MONTGOMERY STREET, SUITE 300, MOBILE, AL 36602 (251) 433-1811
ELECTRICAL ENGINEERS BUSINESS LICENSE #EE-0000528
Pensacola • Panama City Beach • Tuscaloosa • Mobile • Brevard County • Tampa

PONCE, PUERTO RICO
PONCE MARINE UNIT - PIER & BOAT RAMP REPLACEMENT

TYPICAL PANELBOARD DETAILS AND REQUIREMENTS

SHEET ID
E-701

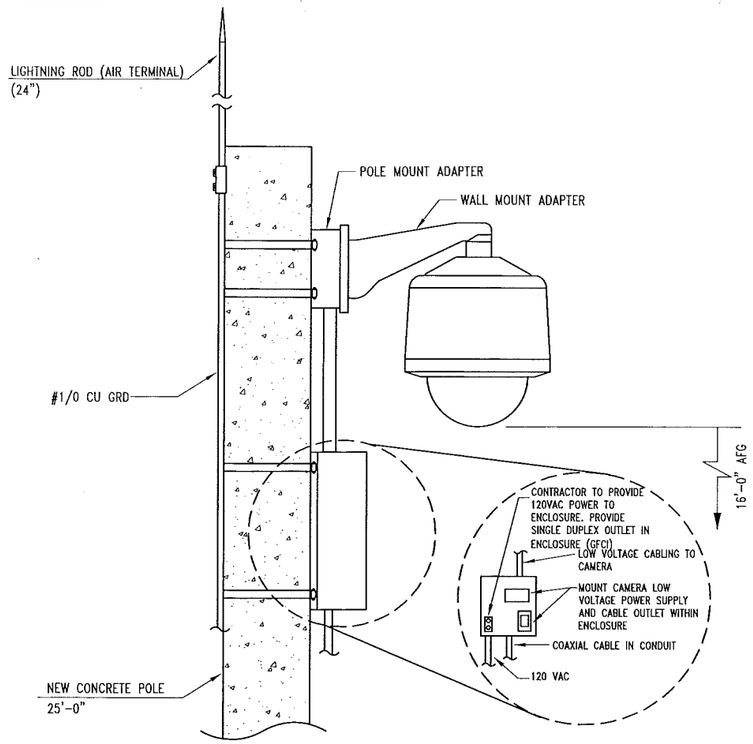

A
E801

EXTERIOR POLE MOUNT PTZ CAMERA

NOT TO SCALE

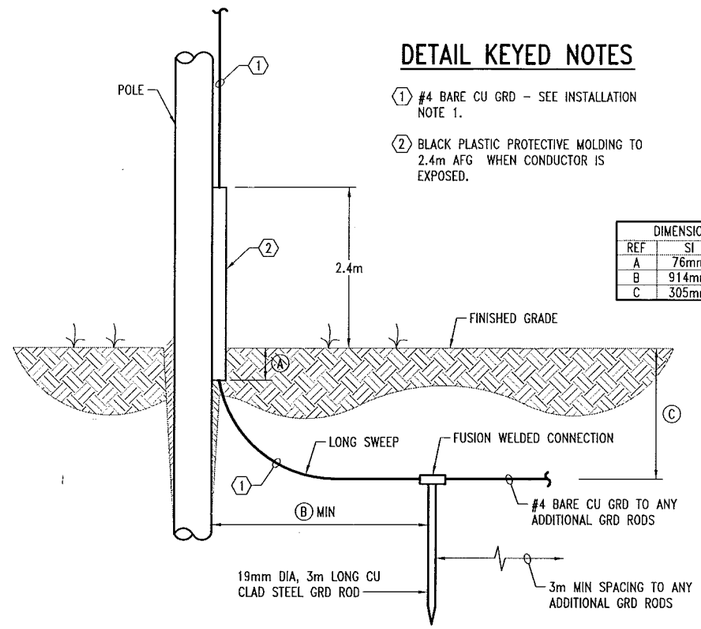

DETAIL KEYED NOTES

1. #4 BARE CU GRD – SEE INSTALLATION NOTE 1.
2. BLACK PLASTIC PROTECTIVE MOLDING TO 2.4m AFG WHEN CONDUCTOR IS EXPOSED.

DIMENSION BLOCK		
REF	SI	ENGLISH
A	76mm	0'-3"
B	914mm	3'-0"
C	305mm	1'-0"

B
E-801

DETAIL – POLE BASE DETAIL

NOT TO SCALE

SHEET NOTES

1. ADD A NEW 8-CHANNEL VIDEO RECORDER TO THE EXISTING CCTV HEAD-END EQUIPMENT.
   * MUST BE COMPATIBLE WITH EXISTING UNIT.
   * PROVIDE ALL INTER-CONNECTIONS
2. EXTEND THE EXISTING SYSTEM TO INCLUDE ONE ADDITIONAL CAMERA LOCATION:

INSTALLATION NOTES

1. IN GENERAL EACH CONCRETE POLE SHALL BE INSTALLED IN ACCORDANCE WITH THE MANUFACTURER'S REQUIREMENTS AND/OR RECOMMENDATIONS. DIMENSIONS ARE TYPICAL ONLY AND ACTUAL DEPTH SHALL BE DEPENDENT UPON SOIL CONDITIONS ENCOUNTERED.
2. EXCAVATION SHALL BE AS NECESSARY TO ALLOW FOR PROPER POLE INSTALLATION, UTILITY AND GROUNDING SYSTEM TRENCHING, BACKFILLING REQUIREMENTS, ETC. ALL SURFACES SHALL BE CUT, PATCHED AND REPAIRED TO THEIR ORIGINAL CONDITION. ALL DAMAGED UTILITY SYSTEMS, UNDERGROUND CIRCUITS, DEVICES, STRUCTURES, ETC., SHALL BE REPAIRED AND PLACED BACK INTO OPERATION.
3. ACTUAL DEPTH TO BE PER POLE MANUFACTURER'S RECOMMENDATIONS.
4. INSTALL A CONTINUOUS COPPER GROUND CONDUCTOR FROM TOP OF POLE TO GROUND ROD CONNECTION.
   - SUPPORT TO POLE 152mm O.C. WHEN EXPOSED
   - SUPPORT TO POLE 610mm O.C. OTHERWISE
   - DO NOT BEND GREATER THAN 45 DEGREES.
5. WHERE EXPOSED, GROUND CONDUCTOR SHALL BE LOCATED ON SAME SIDE AS NEUTRAL CONDUCTOR AND IN QUADRANT OPPOSITE CLIMBING SPACE.
6. BOND ALL NON-CURRENT CARRYING METAL PARTS OF EQUIPMENT, ENCLOSURES, FRAMES, DEVICE SUPPORTS, BRACKETS, CONDUCTOR ASSEMBLIES, ETC.

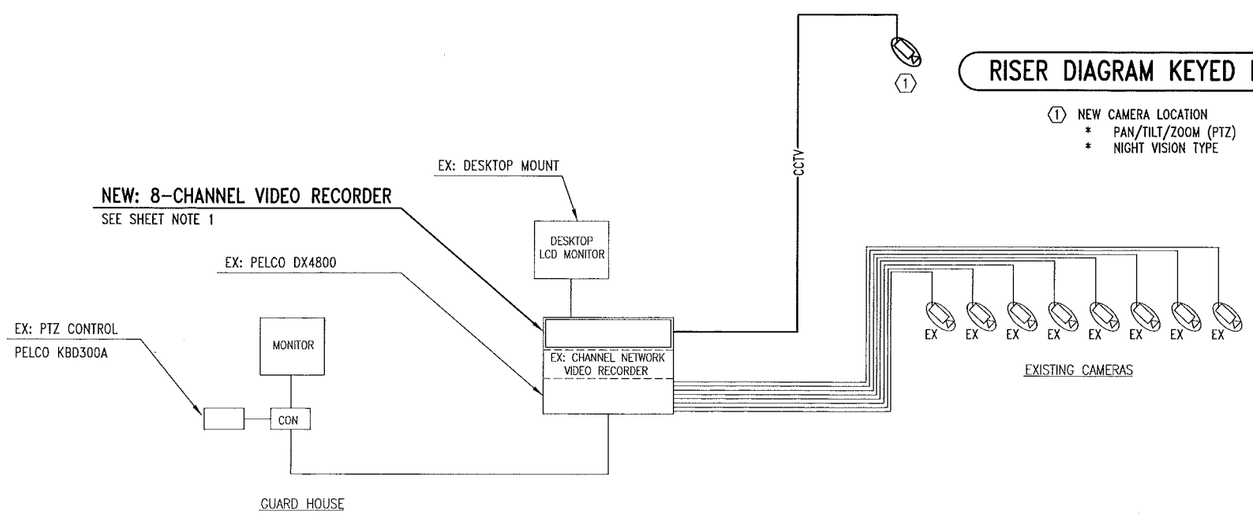

RISER DIAGRAM KEYED NOTES

1. NEW CAMERA LOCATION
   * PAN/TILT/ZOOM (PTZ)
   * NIGHT VISION TYPE

TYPICAL CLOSED CIRCUIT TELEVISION (CCTV) SYSTEM RISER DIAGRAM

NOT TO SCALE

SECURITY SURVEILLANCE TV SYSTEM EQUIP. LEGEND

SYMBOL	DESCRIPTION
SSTV	EXISTING CHANNEL NETWORK VIDEO RECORDER
CON	EXISTING CONTROLLER
	EXTERIOR PAN/TILT/ZOOM (PTZ) CAMERA
CCTV	RG 59/U COAXIAL CABLE IN CONDUIT

US Army Corps of Engineers®

MARK	DESCRIPTION	DATE

DESIGNED BY: KLH
DRAWN BY: EMH, TEW
CHECKED BY: KLH
SUBMITTED BY: KLH
SIZE: ANSI D
ISSUE DATE: NOVEMBER 2017
SOLICITATION NO.: -
CONTRACT NO.: -
PROJECT NUMBER: M017EV17
FILE NAME: E801EV17.dwg

US ARMY CORPS OF ENGINEERS
MOBILE DISTRICT
MOBILE, ALABAMA

BASKERVILLE-DONOVAN, INC.
Innovative Infrastructure Solutions
CIVIL ENGINEERS • ENVIRONMENTAL ENGINEERS • SURVEYORS • PLANNERS
ENGINEERING BUSINESS: EB-0000420
Pensacola • Phoenix City Branch • Tuscaloosa • Atlanta • Brevard County • Tampa

PONCE, PUERTO RICO
PONCE MARINE UNIT - PIER & BOAT RAMP REPLACEMENT

SECURITY SYSTEMS REQUIREMENTS

SHEET ID
E-801

FEEDER SCHEDULE

MARK	CONDUCTORS	CONDUIT SI	CONDUIT ENGLISH	REMARKS
A	2#4 & 1#8 GRD	27mm	1"	
B	2#6 & 1#8 GRD	27mm	1"	
C	2#12 & 1#12 GRD	21mm	3/4"	
D	2#10 & 1#10 GRD	21mm	3/4"	
E	3#4 & 1#8 GRD	21mm	3/4"	FLEX
F				
G				
H				
I				
J				
K				

NOTES:
1. ALL CONDUCTOR SIZES ARE INDICATED IN AMERICAN WIRE GAUGE (AWG) OR 'kCMIL' UNLESS NOTED OTHERWISE.
2. UNLESS NOTED OTHERWISE LOW VOLTAGE CONDUCTORS SHALL BE RATED AT 600 VOLTS BASED UPON AN AMBIENT TEMPERATURE OF 30 DEGREES C AND AS FOLLOWS:
   - COPPER
   - INSULATED (THW OR THHN/THWN TYPE)
   - TEMPERATURE RATING - 75 DEGREES C
3. SEE "CONDUCTOR SCHEDULE & PROPERTIES DESIGNATIONS"

FUSE SCHEDULE - LOW VOLTAGE

DES	DESCRIPTION	REMARKS	UL AIC RATING
MCF	MISCELLANEOUS CARTRIDGE FUSES	UTILIZE IN CONTROL AND/OR ELECTRONIC CIRCUITS ONLY.	NOT RATED
H	CLASS H	ANSI/UL 198B 600 AMPERES & LESS	10,000 AMPERES
HTD	CLASS H TIME DELAY	ANSI/UL 198B MIN DELAY OF 10S @ 50% OF RATING 600 AMPERES & LESS	10,000 AMPERES
RK1	CLASS RK1 CURRENT LIMITING	ANSI/UL 198E 600 AMPERES & LESS	200.000 AMPERES
RK5	CLASS RK5 CURRENT LIMITING DUAL-ELEMENT TIME DELAY	ANSI/UL 198E 600 AMPERES & LESS	200.000 AMPERES
L	CLASS L CURRENT LIMITING	ANSI/UL 198C 601 TO 6000 AMPERES	200.000 AMPERES
T	CLASS T CURRENT LIMITING (REDUCED SIZE)	ANSI/UL 198H 600V - 800 AMPERES & LESS 250V - 1200 AMPERES & LESS	10,000 AMPERES

NOTES:
1. FUSES SHALL BE IN ACCORDANCE WITH ANSI C97.1 AND THE ANSI/UL 198 SERIES. THE NONRENEWABLE TYPE, AND SHALL BE APPLIED AND INSTALLED IN ACCORDANCE WITH THE MANUFACTURER'S RECOMMENDATION AND CONTRACT DOCUMENTS.

DIAGRAM SYMBOLS

- DISCONNECT SWITCH - NONFUSIBLE
- DISCONNECT - FUSIBLE
- MOTOR CONTROLLER
- COMBINATION CONTROLLER/CIRCUIT BREAKER
- COMBINATION CONTROLLER/FUSED DISCONNECT SWITCH
- CIRCUIT BREAKER (GFCI TYPE)
- CIRCUIT BREAKER
- NONFUSIBLE SWITCH
- FUSIBLE SWITCH
- TRANSFER SWITCH
- CONTACTS - NORMALLY OPEN
- CONTACTS - NORMALLY CLOSED
- THERMAL ELEMENT
- FUSIBLE ELEMENT
- COIL
- FUSE
- TRANSFORMER WINDINGS
- INSTRUMENT TRANSFORMER
- CURRENT TRANSFORMER
- ALTERNATING CURRENT POWER SOURCE
- DIRECT CURRENT POWER SOURCE
- BATTERY
- WEATHERHEAD
- SPLICE
- DRAWOUT CONNECTION
- BUILDING PENETRATION/SEAL

SINGLE LINE DIAGRAM NOTES

1. THE PURPOSE OF THE DIAGRAM IS TO DEMONSTRATE THE POWER SYSTEM SERVICE REQUIREMENTS, BUS CAPACITIES, FEEDER REQUIREMENTS, LEVELS OF PROTECTION, ETC., IN ORDER TO PROVIDE A COORDINATED AND PROTECTED POWER DISTRIBUTION SYSTEM.
2. AMPERE INTERRUPTING CAPACITY OR SHORT CIRCUIT CURRENT RATINGS ARE INDICATED AT VARIOUS BUSES IN THE SYSTEM AND THE CONTRACTOR SHALL COORDINATE, FURNISH AND INSTALL THE PROPER EQUIPMENT, DEVICES, TERMINATIONS AND MATERIAL AT THOSE LOCATIONS CAPABLE OF INTERRUPTING AND/OR WITHSTANDING THESE CURRENTS WITHOUT DAMAGE IN ACCORDANCE WITH UL AND THE NEC.
3. ALL OVERCURRENT PROTECTIVE DEVICES FOR THIS PROJECT SHALL BE CURRENT SENSING DEVICES AND SHALL PROTECT ALL BUSES, CONDUCTORS, EQUIPMENT, DEVICES, MOTORS, APPLIANCES, TRANSFORMERS AND SYSTEMS INDICATED. THE FOLLOWING TYPES OF PROTECTION SHALL BE PROVIDED:
   - OVERCURRENT
   - SHORT CIRCUIT
   - GROUND-FAULT
   - OVERLOAD

   THE FOLLOWING TYPES OF DEVICES ARE TO BE USED AND COORDINATED FOR THIS PROJECT:
   - CIRCUIT BREAKERS
   - FUSES
   - GROUND-FAULT SENSING DEVICES
4. APPLICATION, INSTALLATION AND CONNECTION OF ALL DEVICES SHALL BE IN ACCORDANCE WITH THE NEC, MANUFACTURER'S RECOMMENDATIONS AND CONTRACT DOCUMENTS.
5. ALL EQUIPMENT LOADS AND PROTECTION ARE TYPICAL AND BASED UPON DESIGN CALCULATIONS FOR BIDDING PURPOSES. THE CONTRACTOR SHALL BE RESPONSIBLE TO COORDINATE AND VERIFY WITH ALL DIVISIONS THE ACTUAL NAMEPLATE DATA OF ALL EQUIPMENT AND DEVICES SUPPLIED ON THIS PROJECT. BASE BID SHALL INCLUDE PROVIDING THE PROPER PROTECTIVE DEVICES FOR ALL COMPONENTS OF THE ELECTRICAL SYSTEM IN ACCORDANCE WITH NOTE 3 ABOVE AND AS PER EQUIPMENT MANUFACTURER'S NAMEPLATE DATA OR INSTRUCTIONS. THE CONTRACT DRAWINGS MAY NOT SIZE THE ACTUAL FUSE SIZE FOR CERTAIN SYSTEMS AND THE CONTRACTOR WILL BE RESPONSIBLE TO SIZE IN ACCORDANCE WITH NAMEPLATE DATA AND FURNISH THIS INFORMATION WITH THE AS-BUILT DRAWINGS.
6. CIRCUIT BREAKERS SHALL BE INSTALLED AS INDICATED RATED FOR THE PROPER VOLTAGE POTENTIAL, CURRENT, FREQUENCY, AND THE INTERRUPTING RATING INDICATED. CIRCUIT BREAKERS SHALL BE INSTALLED IN UL LISTED ENCLOSURES WITHIN THE ENVIRONMENTAL LIMITATION LISTED OF THE UNIT, SUCH AS AMBIENT TEMPERATURE, HUMIDITY, CLEAN & FREE FROM CONTAMINANTS. CIRCUIT BREAKERS SHALL PROVIDE SIMULTANEOUS DISCONNECTION OF ALL PHASE CONDUCTORS DURING TRIPPING. ALL LOW VOLTAGE CIRCUIT BREAKERS WITHIN THE SYSTEM SHALL BE OF THE SAME MANUFACTURER SO THAT COORDINATION UP AND DOWN STREAM CAN BE FACILITATED.
7. FUSES SHALL BE INSTALLED AS INDICATED, RATED FOR THE PROPER VOLTAGE POTENTIAL, CURRENT, FREQUENCY, MAXIMUM PEAK LET THROUGH, MAXIMUM CLEARING THERMAL ENERGY (I T), AND THE INTERRUPTING RATING INDICATED. FUSES SHALL BE INSTALLED IN UL LISTED ENCLOSURES WITHIN THE ENVIRONMENTAL LIMITATION LISTING OF THE UNITS, SUCH AS AMBIENT TEMPERATURE, HUMIDITY, CLEAN & FREE FROM CONTAMINANTS. ALL FUSES WITHIN THE SYSTEM SHALL BE OF THE SAME MANUFACTURER SO THAT COORDINATION UP AND DOWN STREAM CAN BE FACILITATED.
8. WHEN APPLYING AND INSTALLING PROTECTIVE DEVICES THE CONTRACTOR SHALL TAKE INTO CONSIDERATION THE FOLLOWING:
   - STEADY STATE CONTINUOUS CURRENT
   - IN-RUSH CURRENT FROM MOTOR STARTING
   - IN-RUSH CURRENT FROM TRANSFORMER MAGNETIZING UNDER LOAD
   - SHORT CIRCUIT WITHSTAND RATINGS-NEC 110-10 AND 240-1
   - INTERRUPTING RATINGS-NEC 110-9 AND 230-65
   - CURRENT LIMITING LET THROUGH CURRENTS-NEC 240-11
9. THE CONTRACTOR IS TOTALLY RESPONSIBLE FOR THE INSTALLATION, MARKING AND CONNECTING OF ALL POWER CONDUCTORS FOR THE PROPER PHASE SEQUENCE AND BALANCED LOADING.

US Army Corps of Engineers®

MARK	DESCRIPTION	DATE

ISSUE DATE: NOVEMBER 2017
SOLICITATION NO.: -
CONTRACT NO.: -
PROJECT NUMBER: M017EV17
FILE NAME: E900EV17.dwg

DESIGNED BY: KLH
DRAWN BY: EWH, TEW
CHECKED BY: KLH
SUBMITTED BY: KLH
SIZE: ANSI D

US ARMY CORPS OF ENGINEERS
MOBILE DISTRICT
MOBILE, ALABAMA

BASKERVILLE-DONOVAN, INC.
Innovative Infrastructure Solutions
EST. 1940 ENGINEERS • ARCHITECTS • PLANNERS • SURVEYORS
ENGINEERING BUSINESS EB-0000240
Pensacola - Panama City Beach - Tallahassee - Moore - Brevard County - Tampa

PONCE, PUERTO RICO
PONCE MARINE UNIT - PIER & BOAT RAMP REPLACEMENT

SINGLE LINE DIAGRAM NOTES AND SCHEDULES

SHEET ID
E-900

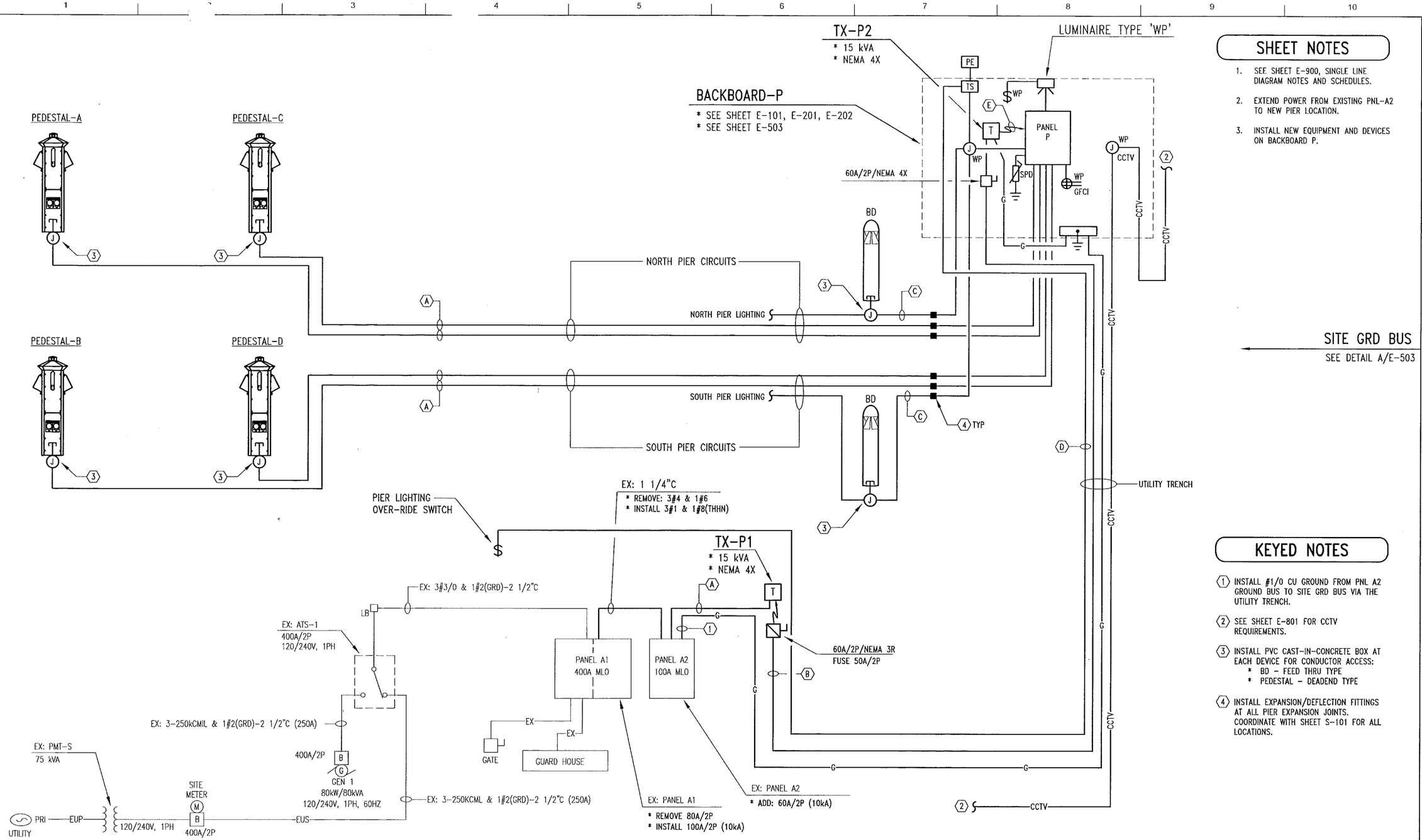

SHEET NOTES

1. SEE SHEET E-900, SINGLE LINE DIAGRAM NOTES AND SCHEDULES.
2. EXTEND POWER FROM EXISTING PNL-A2 TO NEW PIER LOCATION.
3. INSTALL NEW EQUIPMENT AND DEVICES ON BACKBOARD P.

KEYED NOTES

1. INSTALL #1/0 CU GROUND FROM PNL A2 GROUND BUS TO SITE GRD BUS VIA THE UTILITY TRENCH.
2. SEE SHEET E-801 FOR CCTV REQUIREMENTS.
3. INSTALL PVC CAST-IN-CONCRETE BOX AT EACH DEVICE FOR CONDUCTOR ACCESS:
   * BD - FEED THRU TYPE
   * PEDESTAL - DEADEND TYPE
4. INSTALL EXPANSION/DEFLECTION FITTINGS AT ALL PIER EXPANSION JOINTS. COORDINATE WITH SHEET S-101 FOR ALL LOCATIONS.

NOTE:

LIGHT LINES INDICATE EXISTING

DARK LINES INDICATE NEW

SINGLE LINE DIAGRAM

NO SCALE

US Army Corps of Engineers®

MARK	DESCRIPTION	DATE

DESIGNED BY: KLH
DRAWN BY: EWP, TEW
CHECKED BY: KLH
SUBMITTED BY: KLH
SIZE: ANSI D
ISSUE DATE: NOVEMBER 2017
SOLICITATION NO.: -
CONTRACT NO.: -
PROJECT NUMBER: M017EV17
FILE NAME: E901EV17.dwg

BASKERVILLE-DONOVAN, INC.
Innovative Infrastructure Solutions
1201 SCHILLINGER ROAD S, MOBILE, AL 36695 (251) 639-8251
ENGINEERING BUSINESS 19-00 2006
Pensacola • Panama City Beach • Tallahassee • Mobile • Brevard County • Tampa

US ARMY CORPS OF ENGINEERS
MOBILE DISTRICT
MOBILE, ALABAMA

PONCE, PUERTO RICO
PONCE MARINE UNIT - PIER & BOAT RAMP REPLACEMENT

SINGLE LINE DIAGRAM

SHEET ID
E-901